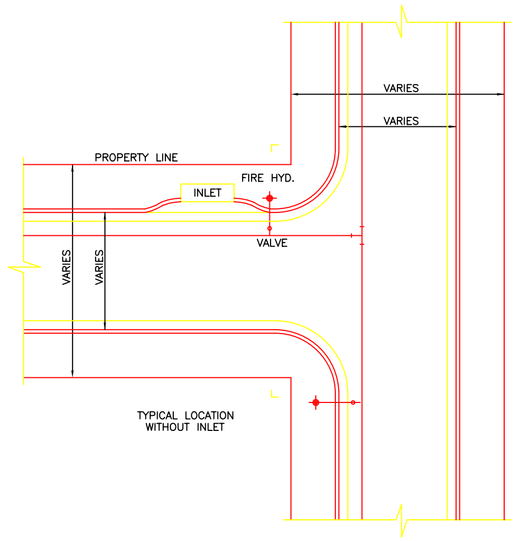

TYPICAL FIRE HYDRANT LOCATION

1. FIRE HYDRANT TO BE LOCATED ON POINT OF CURB RADIUS CURVATURE/RETURN.
2. MINIMUM SETBACK TO BE 18" BEHIND CURB.
3. FIRE HYDRANT OPERATING VALVE TO BE INSTALLED WITHIN LIMITS OF PAVING AND AS PER DETAIL.
4. MAIN FIRE HYDRANT NOZZLE TO BE DIRECTED TOWARDS CURB LINE OF STREET INSTALLED.

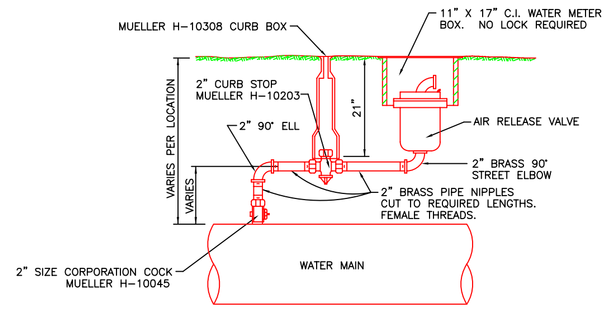

DETAIL OF AIR RELEASE ASSEMBLY

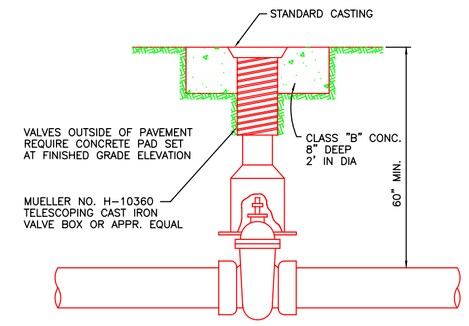

TYPICAL VALVE INSTALLATION

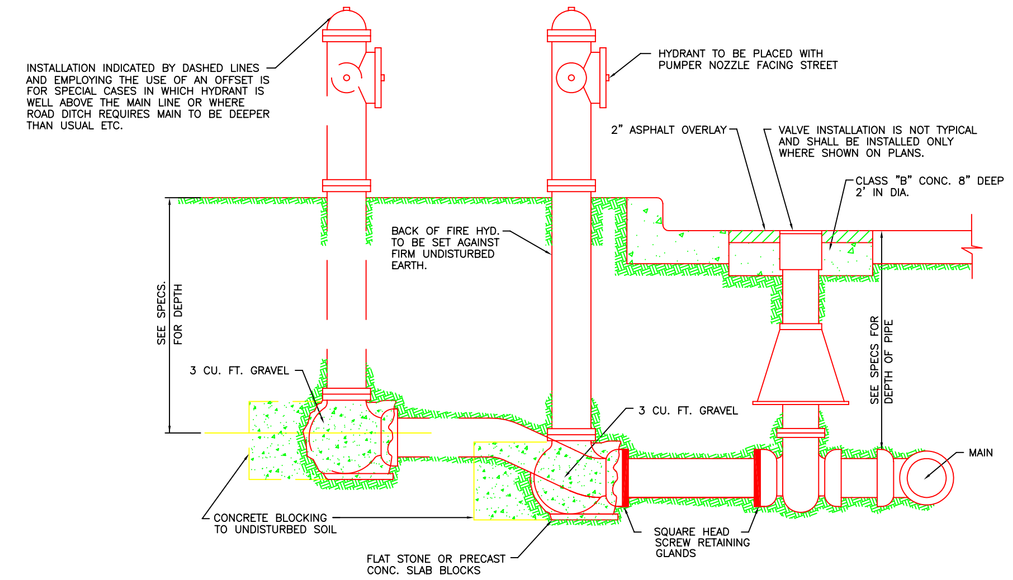

TYPICAL FIRE HYDRANT INSTALLATION

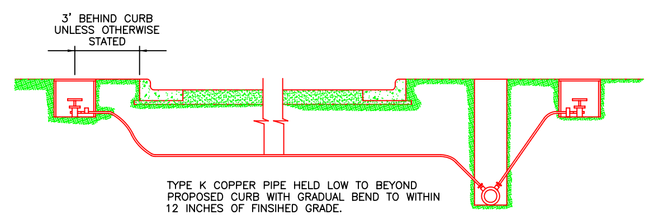

TYPICAL SERVICE CONNECTION

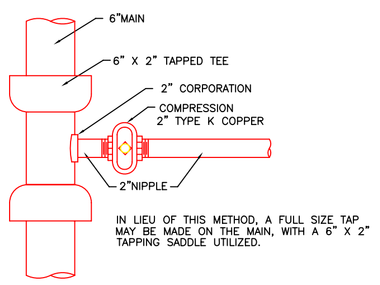

METHOD OF CONNECTING 2" PIPE TO MAIN

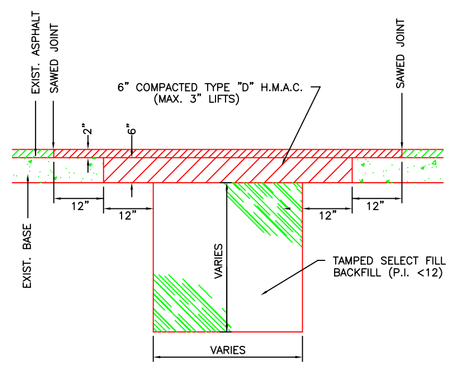

PAVEMENT REPAIR DETAILS

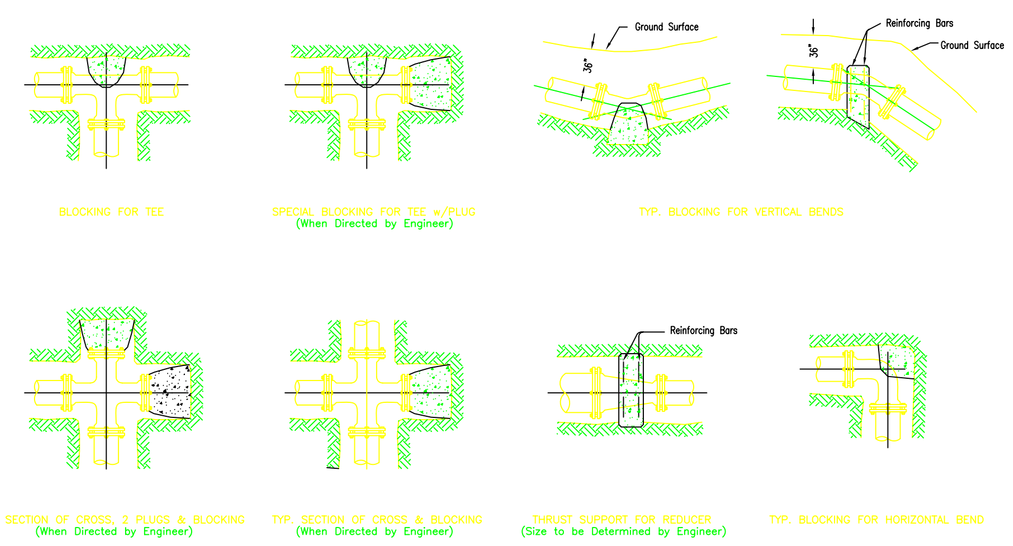

THRUST BLOCKING DETAILS

GENERAL NOTES FOR THRUST BLOCKING:

1. All blocking shall be against undisturbed hand dug soil.
2. Where soil conditions make it necessary to pour concrete blocking over joints, the ends of the adjacent pipes must have a kicker block to resist movement of these joints.
3. Weight calculations to be based on thrust due to static pressure +50% thrust = 2 AP SIN 1/20 where A=area of pipe, P=water pressure.
4. Where blocking over plug, plug should be covered with paper to prevent binding of concrete.
5. Where shear becomes a problem, proper reinforcing must be installed into the blocking.
6. Clearance shall be a minimum of 6" between pipe and obstruction.
7. Clearance on pipes belonging to oil & gas companies shall be 18" unless special permission is given by these companies.
8. Provide minimum bearing area in S.E. as follows based on 150 psi test pressure and 2000 psf 50:1 bearing.

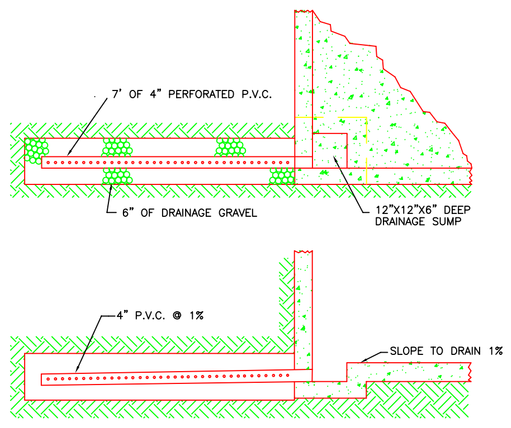

TYPICAL BOX DRAINAGE LINE

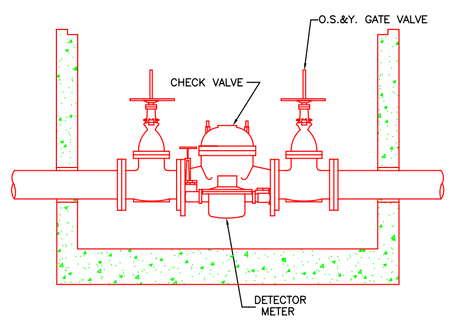

TYPICAL DETECTOR CHECK VALVE & METER INSTALLATION

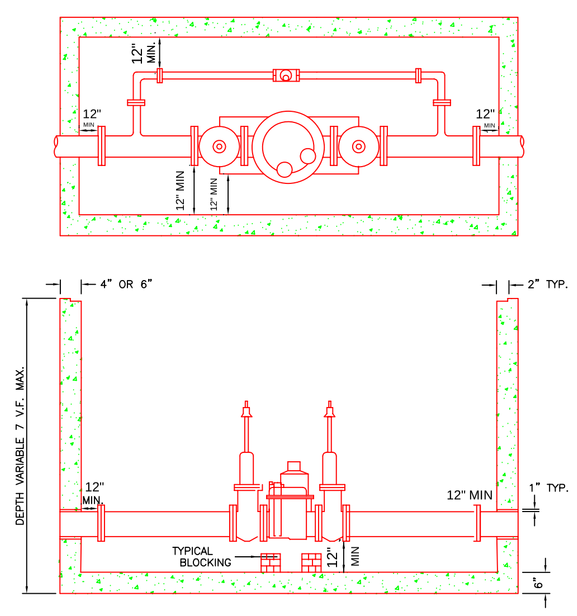

TYPICAL BLOCKING FOR 6" AND LARGER COMPOUND WATER METERS

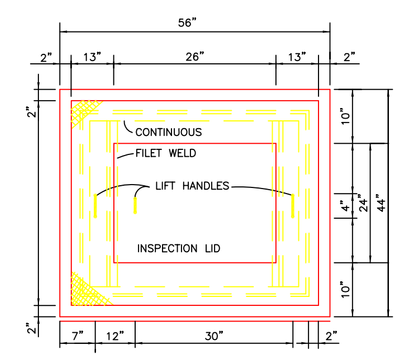

DISTANCES WILL VARY ACCORDING TO METER SIZE AND DEPTH. PITS OVER 5' DEEP SHALL HAVE WALLS " THICK.

1 1/2" X 1 1/2" X 3/16" ANGLE IRON AROUND PERIMETER OF LID & EACH END OF THE INSPECTION LID

LID TO BE CONSTRUCTED OF ONE-QUARTER INCH DIAMOND STEEL - 300lbs. per SQUARE INCH LOAD WEIGHT. SKID RESISTANT RAISED DIAMOND PLATE.

LID SHALL BE PAINTED WITH RED PRIMER PAINT

TOP VIEW

FOR METER PIT 3'X4' I.D. FOR 6" DECTOR CHECK LESS THAN 5' DEEP

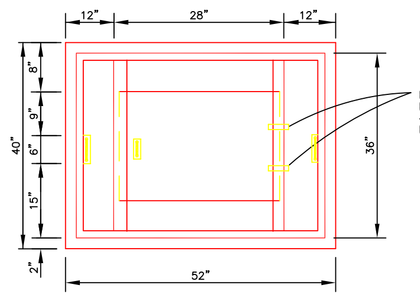

BOTTOM VIEW (LID)

HINGES - 2 EACH, WELED ON BOTTOM OF PLATE. 4" X 4" STEEL REVERSIBLE BUTTS - TIGHT PIN.

INSPECTION LID LIFT HANDLE 3/8" IRON ROD WELDED TO 1/4" STEEL PLATE (2"X5")

LID LIFT HANDLES (2 EACH) 3/8 IRON ROD WELDED TO 1/4" STEEL PLATE (2"X6")

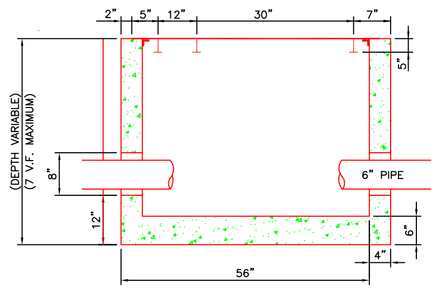

1 1/2 " ANGLE IRON WELDED TO THE BOTTOM OF LID TO PROTRUDE DOWN WALL OF BOX FOR PERIMETER TO SECURE COVER FROM MOVEMENT.

NO. 3 BAR REINFORCEMENT 12" CENTER CLASS "A" CONCRETE CONSTRUCTION

PIT COUNTERSUNK 3/8" TO 1/2" FOR PLACEMENT OF LID.

OUTSIDE EDGES OF PIT TO BE CHAMFERED

LONGITUDINAL SECTION

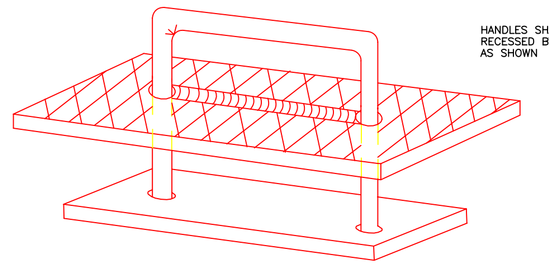

HANDLES SHALL BE PARTIALLY RECESSED BY BEVELING LID AS SHOWN

TYPICAL LIFT HANDLE

					BY CK
				REVISIONS	
				DATE BY	

DESIGNED BY:
DRAWN BY: C.O.T.
CHECKED BY: C.O.T.
DATE: JANUARY 1995
SCALE: NO SCALE

tyler water utilities

STANDARD WATER MAIN DETAILS

FIELD BK. #
C.I.P. #
SHEET NO.
of