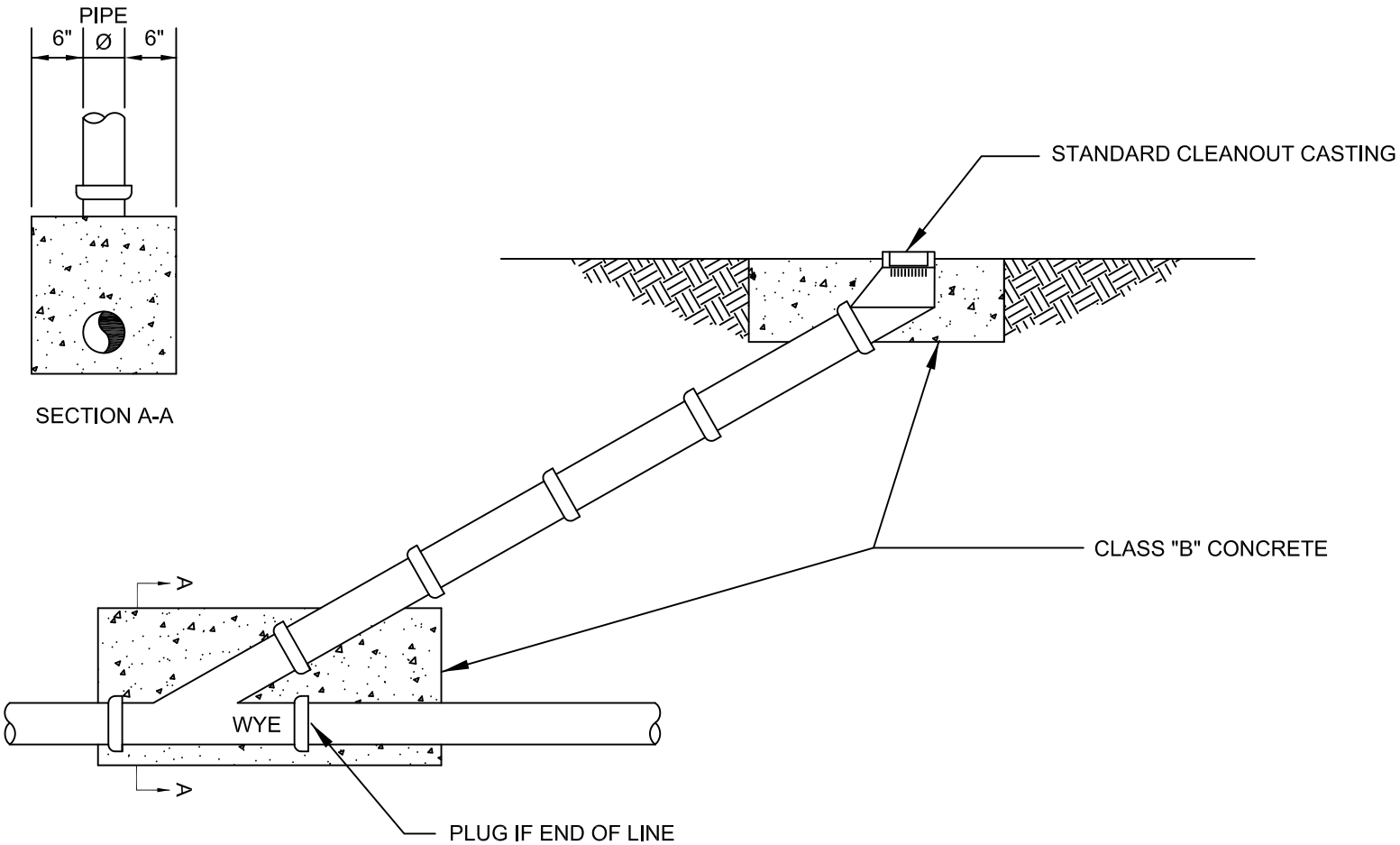

CITY OF TYLER
STANDARD DETAIL

CLEANOUT

APPROVED: _____
UTILITIES ENGINEER

REVISION DATE: 8/2/11