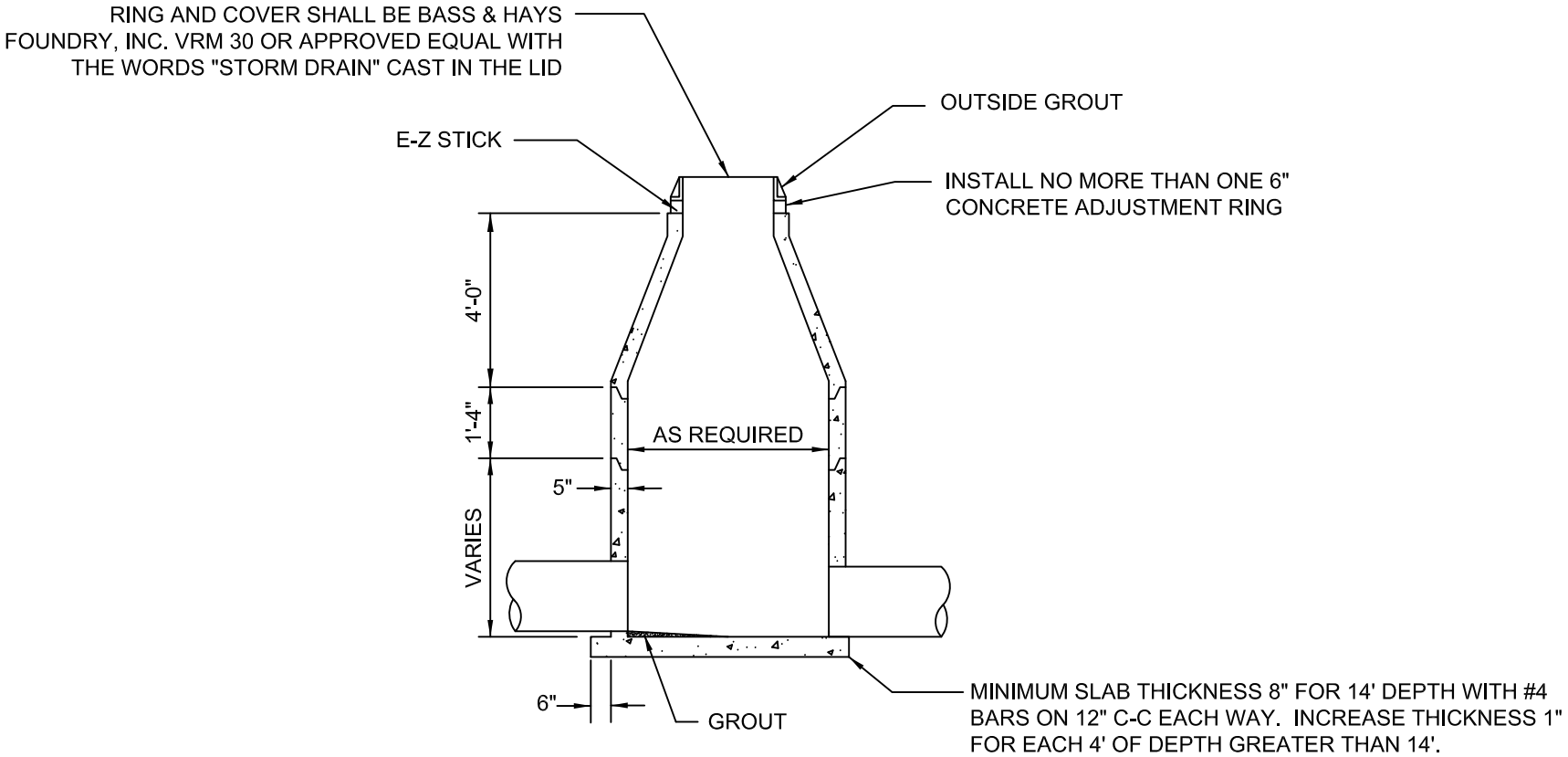

NOTES:

1. ALL PRECAST MANHOLE RISER AND SECTIONS SHALL BE REINFORCED CONCRETE AND SHALL CONFORM TO ASTM C-478.
2. ALL JOINTS IN MANHOLE TO HAVE O-RING RUBBER GASKETS.
3. WATERSTOP SLEEVE SHALL BE INCORPORATED INTO PRECAST MANHOLE SECTIONS.
4. GROUT BOTTOM OF MANHOLE TO 1/2 Ø OF PIPE AND SLOPE GROUT 2" TOWARD INVERT.
5. 4' DIAMETER MANHOLES SHALL BE USED FOR UP TO 18" Ø RCP.
   5' DIAMETER MANHOLES SHALL BE USED FOR UP TO 24" Ø RCP.
   6' DIAMETER MANHOLES SHALL BE USED FOR GREATER THAN 24" Ø RCP.

CITY OF TYLER STANDARD DETAIL	**STORM SEWER PRECAST MANHOLE**	APPROVED: _____ UTILITIES ENGINEER REVISION DATE: 8/2/11