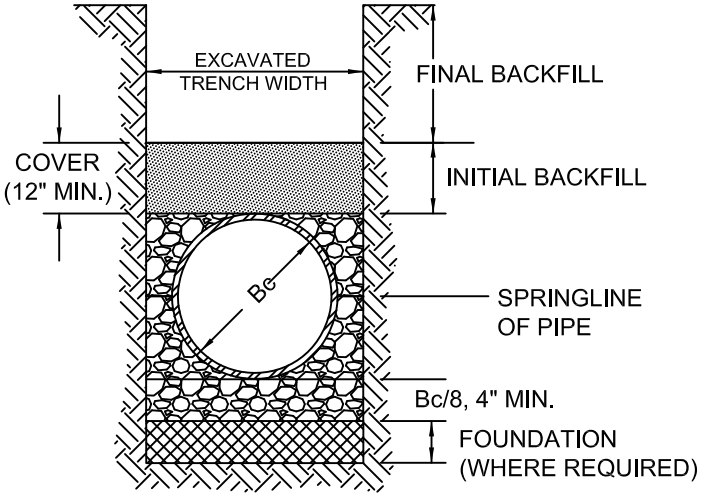

CRUSHED STONE ENCASEMENT

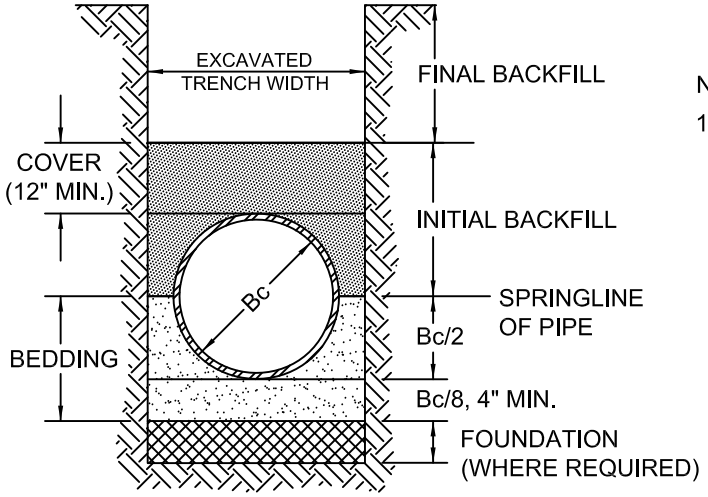

CLASS "B"

NOTES:

1. USE CLASS "C" BEDDING FOR INSTALLATIONS FROM 0' TO 14'.

   USE CLASS "B" BEDDING FOR INSTALLATIONS FROM 14' TO 20'.

   USE CRUSHED STONE ENCASEMENT BEDDING FOR INSTALLATIONS GREATER THAN 20'

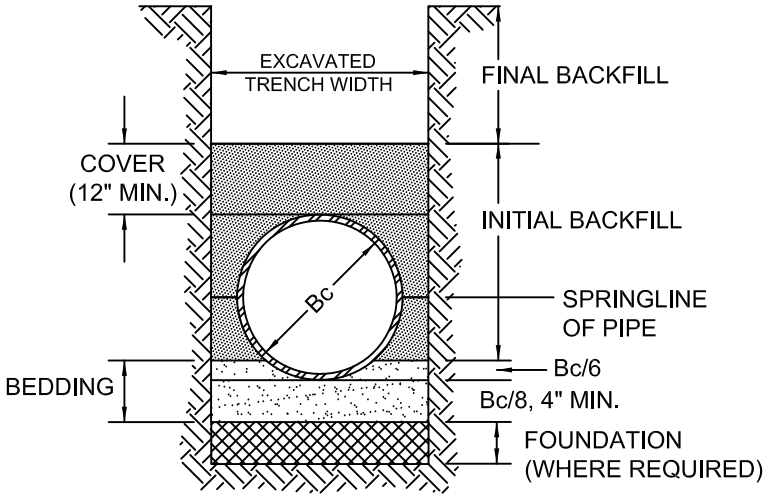

CLASS "C"

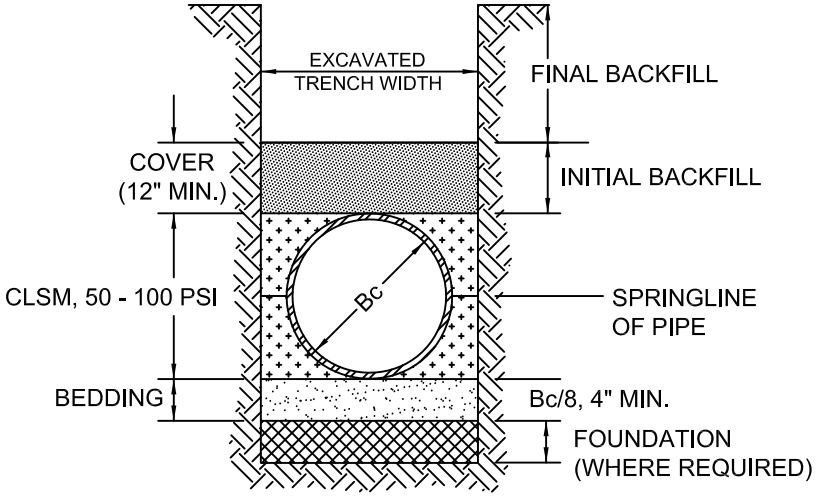

CONTROLLED LOW STRENGTH MATERIAL

CITY OF TYLER STANDARD DETAIL	**TRENCH CROSS-SECTION FOR VCP**	APPROVED: _____ UTILITIES ENGINEER REVISION DATE: 8/2/11