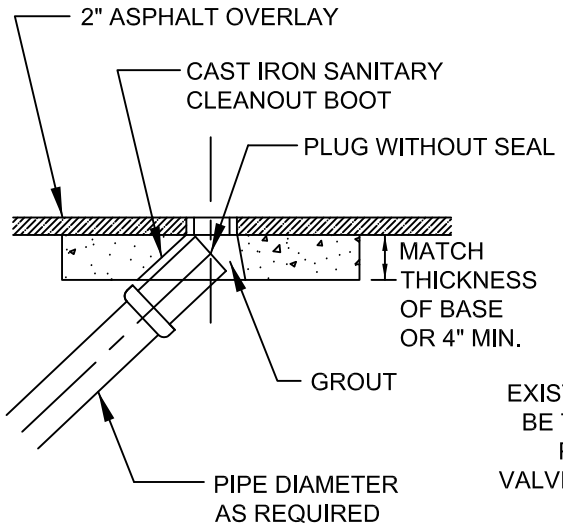

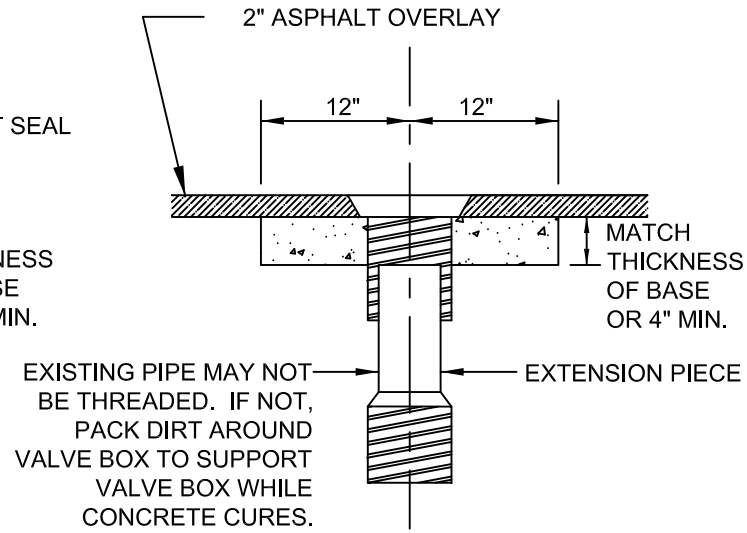

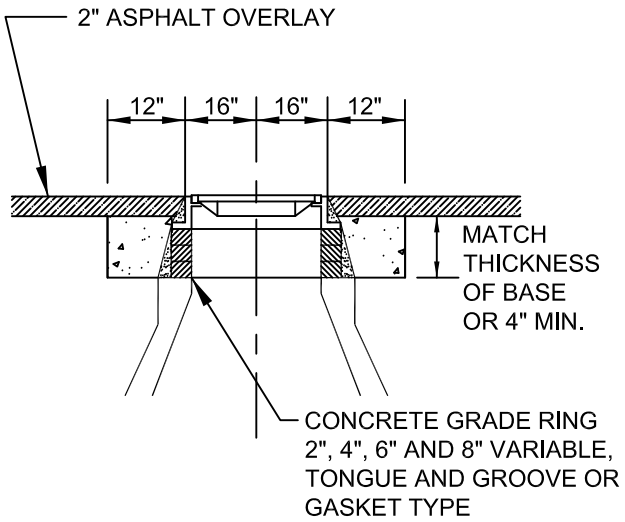

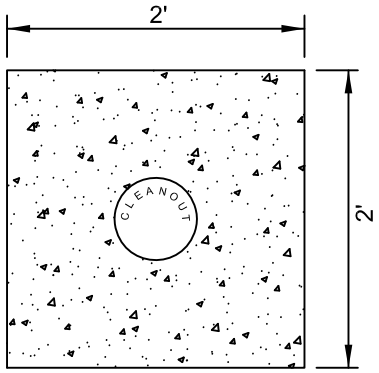

CONCRETE PAD TO BE CLASS "B" CONCRETE, 2' X 2' X 4" MIN. THICK, OR APPROVED EQUAL

CLEANOUT

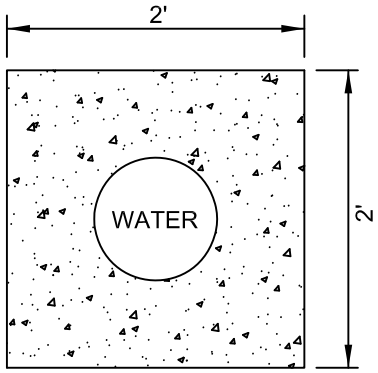

CONCRETE PAD TO BE CLASS "B" CONCRETE, 2' X 2' X 4" MIN. THICK, OR APPROVED EQUAL

WATER VALVE

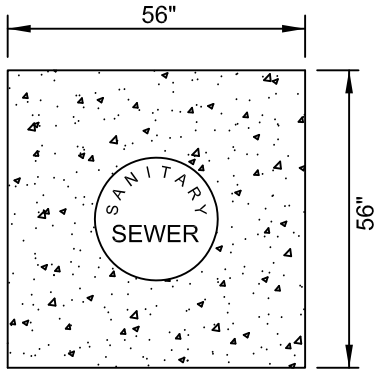

CONCRETE PAD TO BE CLASS "B" CONCRETE, 56" X 56" X 4" MIN. THICK, OR APPROVED EQUAL

MANHOLE

NOTES:

1. CONCRETE PAD FOR CLEANOUT AND WATER VALVE ARE TO BE USED OUTSIDE PAVEMENT, AS WELL AS UNDER PAVEMENT. FOR LOCATIONS OUTSIDE OF PAVEMENT, CONCRETE PAD SHALL BE 4" THICK AND THE TOP SHALL BE FLUSH WITH FINISHED GRADE.
2. RISER RINGS SHALL NOT BE ALLOWED WHEN RAISING MANHOLES OR WATER VALVES.

CITY OF TYLER STANDARD DETAIL	**ADJUSTMENTS TO FINISHED GRADE**	APPROVED: _____ UTILITIES ENGINEER REVISION DATE: 5/23/13