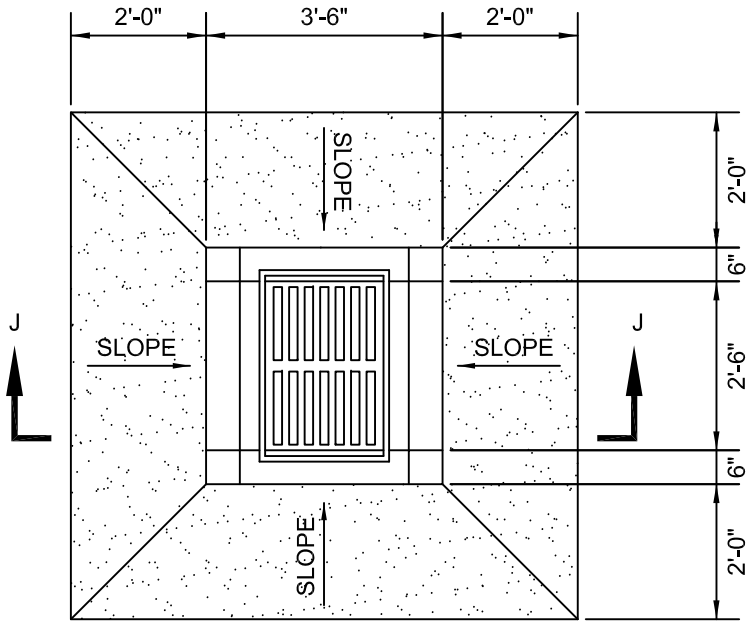

(APRON SUBSIDIARY TO INLET)

PLAN

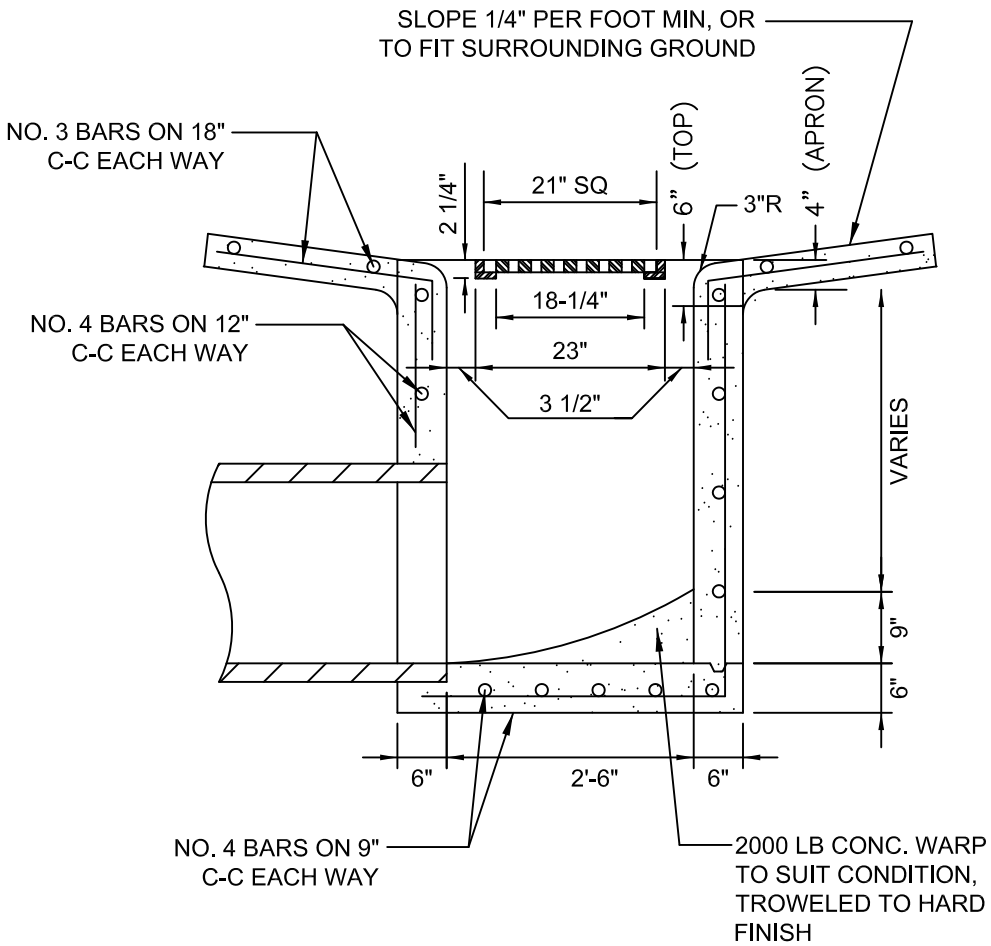

SECTION "J-J"

CITY OF TYLER
STANDARD DETAIL

STORM SEWER
AREA INLET

APPROVED: _____
CITY ENGINEER

REVISION DATE: 06/13/14