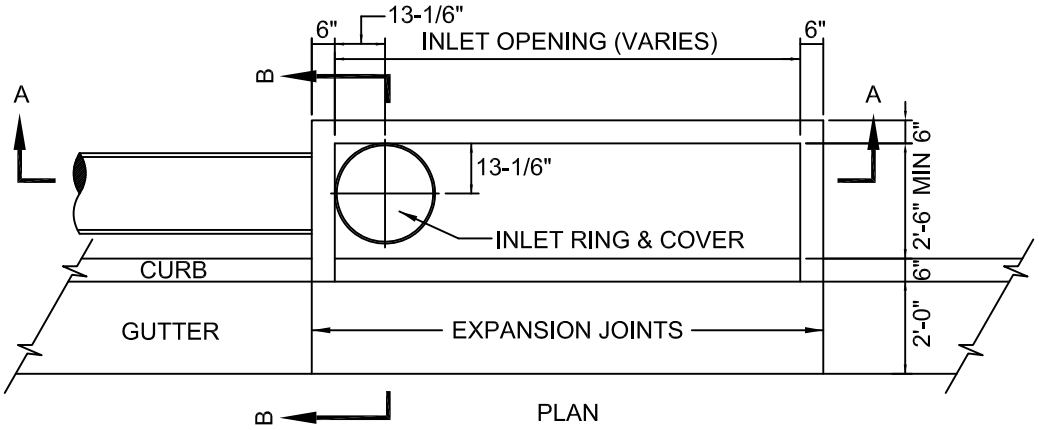

PLAN

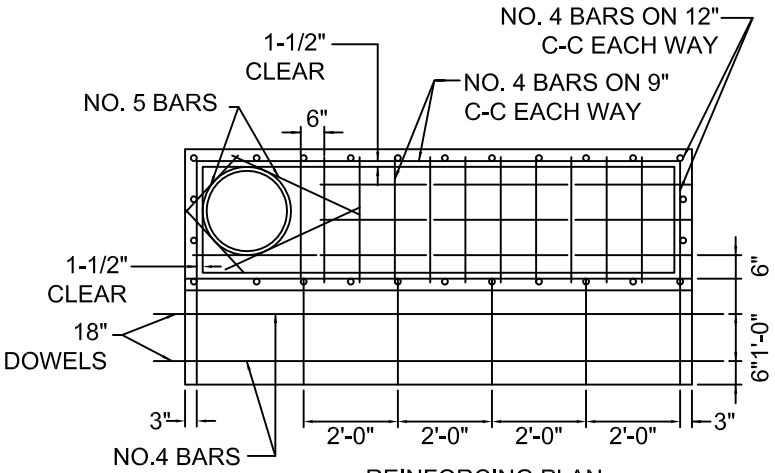

REINFORCING PLAN
TOP & THROAT

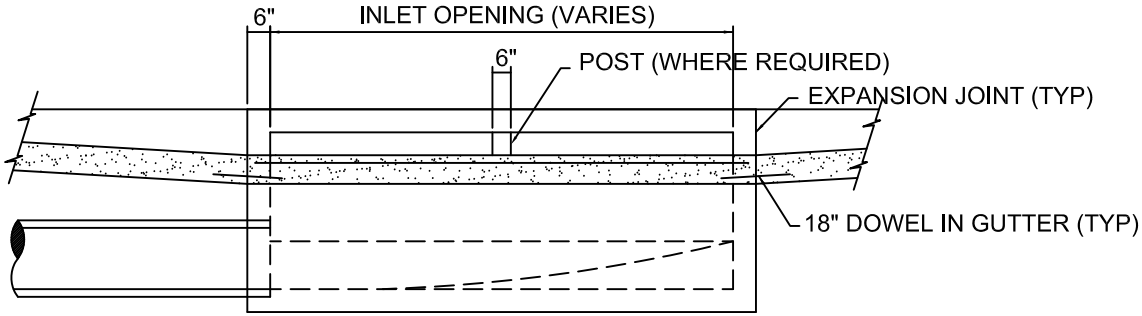

PROFILE

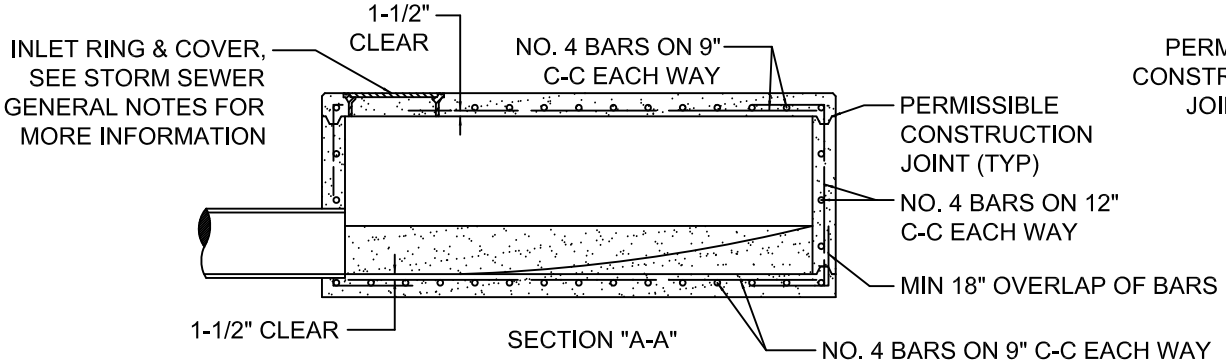

SECTION "A-A"

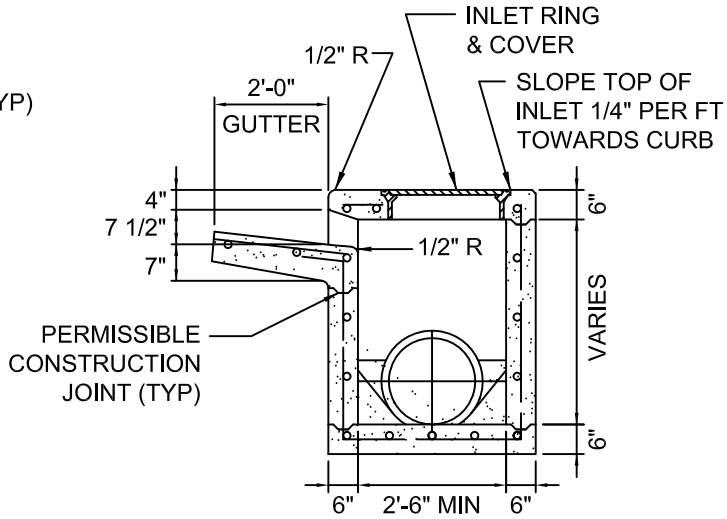

SECTION "B-B"

CITY OF TYLER STANDARD DETAIL	**STORM SEWER** **STANDARD CURB INLET**	APPROVED: _____ CITY ENGINEER REVISION DATE: 06/13/14