SHORELINE LIFT STATION

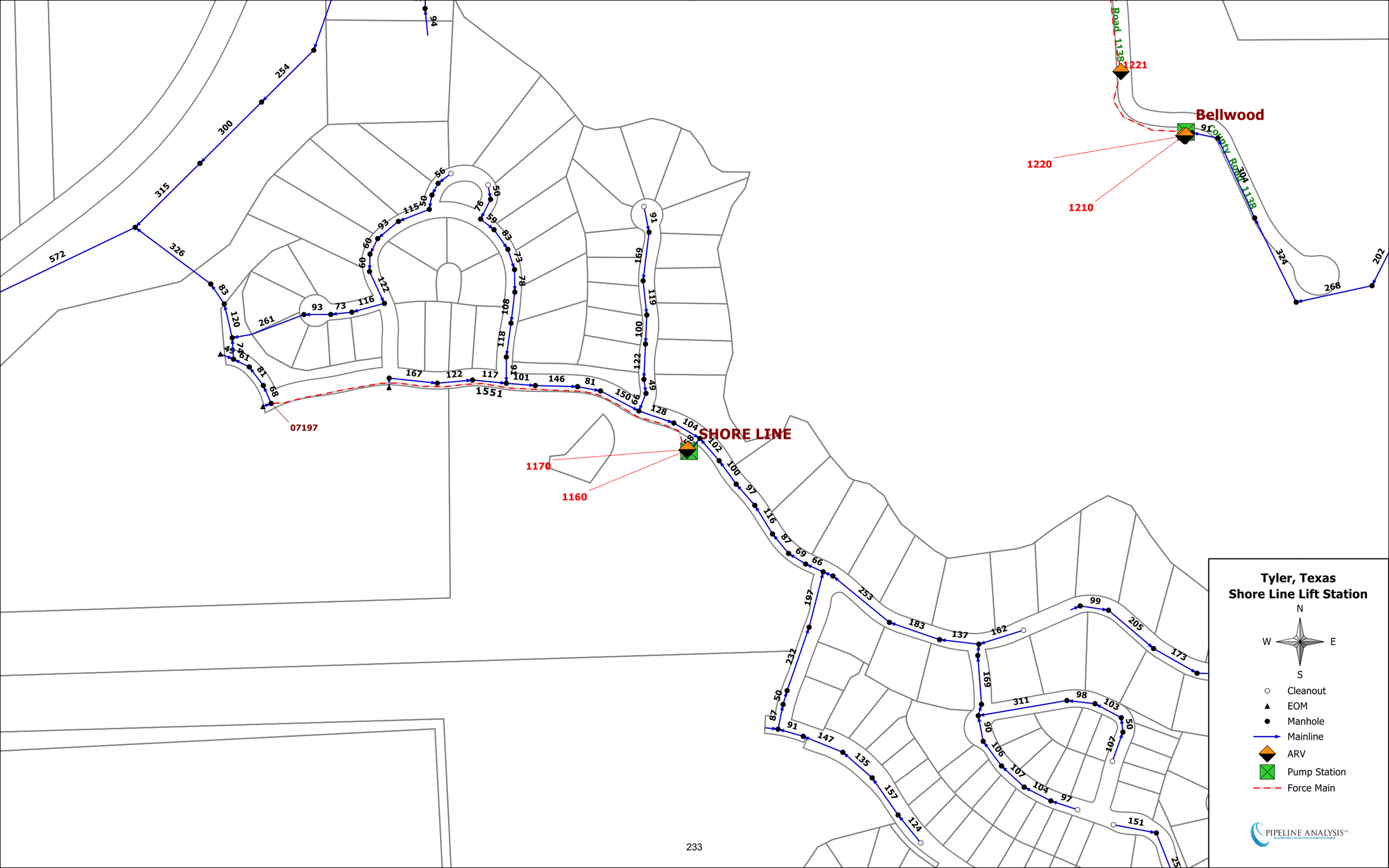
Tyler, Texas
Shore Line Lift Station
N
W
E
S
Cleanout
EOM
Manhole
Mainline
ARV
Pump Station
Force Main
PIPELINE ANALYSIS LLC
SHORE LINE
Bellwood
County Road 1138
1220
1210
1221
1170
1160
1551
07197

Tyler Water Utilities - Lift Station Assessment Form

Lift Station Name SHORELINE **Type** Submersible
Location/Address 4588 Cascade Shoreline Drive
Lift Station Asset ID **Number of Pumps** 2
Firm Capacity in GPM (all pumps operating)
Firm Capacity in GPM (largest pump out of service)
Inspector Don White **Date** Dec 17, 2017
City Works Work Order

Building and Grounds

			Good	Fair	Poor	Critical	N/A
Building Structure	Type:	NONE					
Building Roof/Ceiling			○	○	○	○	○
Building Finishes			○	○	○	○	○
Building Doors and Windows			○	○	○	○	○
Building HVAC	Type:		○	○	○	○	○
Fencing	Type:	COATED chain link	●	○	○	○	○
2'-4" Ped. @ meter Gates Double 13'	Type:	"	●	○	○	○	○
Site/Grounds	Size:	26'-6" x 16'	●	○	○	○	○
Lighting			●	○	○	○	○
Pavement (Driving)	Type:	Concrete	●	○	○	○	○
Drainage	Type:	Surface	○	○	●	○	○
Odor	Comment:	NONE	●	○	○	○	○
Odor Control System	Type:		○	○	○	○	○
Odor Control Mechanical			○	○	○	○	○
Odor Control Media	Type:		○	○	○	○	○
Noise			●	○	○	○	○
Overall Site Appearance			●	○	○	○	○

Comments uphill slope at rear of lift Station held back with silt Fence in poor condition. Erosion silt on concrete lift station surface, wet well & valve vault slab surface +/- 6" above natural ground.

Structural

			Good	Fair	Poor	Critical	N/A
Wet Well	Size:	+/- 7'-4" x 7'-4"					
Debris			●	○	○	○	○
Fats, oils, and grease			●	○	○	○	○
Ventilation		Pipe	●	○	○	○	○
Walls	Material:	Concrete	●	○	○	○	○
Coatings	Type:	—	○	○	○	○	○
Access Hatches	Number:	METAL 1-4'x3'	●	○	○	○	○
Slab		Concrete combination w/ valve vault 16'x 8'-6"	●	○	○	○	○
Dry Well/Valve Vault							
Walls	Material:	4'-6" ϕ concrete	●	○	○	○	○
Coatings	Type:	—	○	○	○	○	○
~~Grating~~/Hatching	Number:	Metal 1 - 2'6"x2'	●	○	○	○	○
~~Stairway/Ladder~~	Material:		○	○	○	○	●
Sump/~~Pump~~	Number:	1 Floor Drain	●	○	○	○	○
Ventilation	Type:	Pipe	●	○	○	○	○

Comments Guide Rails, chain, electric conduits - good

Mechanical

			Good	Fair	Poor	Critical	N/A
Bypass Connection	(Circle)	YES / (NO)					
Piping and Valves							
Suction Valve	Number:	—	○	○	○	○	○
Check Valve	Number:	2 - 4" DI	○	○	●	○	○
Discharge Valve	Number:	2 - 4" DI	○	●	○	○	○

Mechanical (continued)

			Good	Fair	Poor	Critical	N/A
Riser Piping	Material:	4" DI	○	●	○	○	○

Discharge Piping	Material: 4" DI	○	●	○	○	○
Fittings	Material:	●	○	○	○	○

Comments one check valve-good, one has significant corrosion. Compressor for wet well airation

Pumps

Pump 1 Asset ID _____ Make _____ Model _____

Capacity _____ GPM

Impeller Dia./Code _____ Horsepower _____

	Good	Fair	Poor	Critical	N/A
Pump	○	○	○	○	○
Seals	○	○	○	○	○
Motor	○	○	○	○	○
Shaft	○	○	○	○	○
Electrical Cable					
Noise	○	○	○	○	○
Vibration/Heat	○	○	○	○	○

Pump 1 *The following components are to be inspected during pump disassembly*

Oil	○	○	○	○	○
Impeller	○	○	○	○	○
Packing Rings	○	○	○	○	○
Internal Seals	○	○	○	○	○

Pump 2 Asset ID _____ Make _____ Model _____

Capacity _____ GPM

Impeller Dia./Code _____ Horsepower _____

	Good	Fair	Poor	Critical	N/A
Pump	○	○	○	○	○
Seals	○	○	○	○	○
Motor	○	○	○	○	○
Shaft	○	○	○	○	○
Electrical Cable					
Noise	○	○	○	○	○
Vibration/Heat	○	○	○	○	○

Pump 2 *The following components are to be inspected during pump disassembly*

Oil	○	○	○	○	○
Impeller	○	○	○	○	○
Packing Rings	○	○	○	○	○
Internal Seals	○	○	○	○	○

Pump 3 Asset ID _____ Make _____ Model _____

Capacity _____ GPM

Impeller Dia./Code _____ Horsepower _____

	Good	Fair	Poor	Critical	N/A
Pump	○	○	○	○	○
Seals	○	○	○	○	○
Motor	○	○	○	○	○
Shaft	○	○	○	○	○
Electrical Cable					
Noise	○	○	○	○	○
Vibration/Heat	○	○	○	○	○

Pump 3 *The following components are to be inspected during pump disassembly*

	Good	Fair	Poor	Critical	N/A
Oil	○	○	○	○	○
Impeller	○	○	○	○	○
Packing Rings	○	○	○	○	○
Internal Seals	○	○	○	○	○

Pump 4 Asset ID _____ Make _____ Model _____

Capacity _____ GPM

Impeller Dia./Code _____ Horsepower _____

	Good	Fair	Poor	Critical	N/A
Pump	○	○	○	○	○
Seals	○	○	○	○	○
Motor	○	○	○	○	○
Shaft	○	○	○	○	○
Electrical Cable					
Noise	○	○	○	○	○
Vibration/Heat	○	○	○	○	○

Pump 4 *The following components are to be inspected during pump disassembly*

Oil	○	○	○	○	○
Impeller	○	○	○	○	○
Packing Rings	○	○	○	○	○
Internal Seals	○	○	○	○	○

Pump 5 Asset ID _____ Make _____ Model _____

Capacity _____ GPM

Impeller Dia./Code _____ Horsepower _____

	Good	Fair	Poor	Critical	N/A
Pump	○	○	○	○	○
Seals	○	○	○	○	○
Motor	○	○	○	○	○
Shaft	○	○	○	○	○
Electrical Cable					
Noise	○	○	○	○	○
Vibration/Heat	○	○	○	○	○

Pump 5 *The following components are to be inspected during pump disassembly*

Oil	○	○	○	○	○
Impeller	○	○	○	○	○
Packing Rings	○	○	○	○	○
Internal Seals	○	○	○	○	○

Pump 6 Asset ID _____ Make _____ Model _____

Capacity _____ GPM

Impeller Dia./Code _____ Horsepower _____

	Good	Fair	Poor	Critical	N/A
Pump	○	○	○	○	○
Seals	○	○	○	○	○
Motor	○	○	○	○	○
Shaft	○	○	○	○	○
Electrical Cable	○	○	○	○	○
Noise	○	○	○	○	○
Vibration/Heat	○	○	○	○	○

Pump 6 *The following components are to be inspected during pump disassembly*

	Good	Fair	Poor	Critical	N/A
Oil	○	○	○	○	○
Impeller	○	○	○	○	○
Packing Rings	○	○	○	○	○
Internal Seals	○	○	○	○	○

Electrical System

			Good	Fair	Poor	Critical	N/A
Electrical System Power	Volt/Phase:						
Panel/Enclosures	NEMA4X	YES NO	●	○	○	○	○
Transformers (AEP)			○	○	○	○	○
Disconnect	Type:		○	○	○	○	○
Generator	KW	No	○	○	○	○	○
Transfer Switch			○	○	○	○	○
Electrical System Control							
Breakers	Type:		○	○	○	○	○
Speed control/VFD	Type:		○	○	○	○	○
Starters	Type:		○	○	○	○	○
Control Relays	Type:		○	○	○	○	○

Comments

Instrumentation/SCADA

			Good	Fair	Poor	Critical	N/A
Panel	NEMA4X YES NO		○	○	○	○	○
Instrumentation							
Level	Type:	Float	●	○	○	○	○
Flow	Type:	—	○	○	○	○	○

Instrumentation/SCADA (continued)

			Good	Fair	Poor	Critical	N/A
PLC	Type:		○	○	○	○	○
SCADA			○	○	○	○	○
RTU	Type:	uplink	●	○	○	○	○
Radio/Antenna	Type:	with uplink	●	○	○	○	○

Comments Visual and Sound Alarm

Building and Grounds

Lift Station Perimeter Facing South

Wet Well & Valve Vault Slab Surface +1’-6” Above Natural Ground

Erosion Silt on Concrete Surface Facing East

Erosion Silt on Concrete Surface Facing West

Building and Grounds

Uphill Slope Behind Lift Station Held Back By Fence.
Fence in Poor Condition but Not City Property
to Allow For Repair and Maintenance

Structural

Wet Well Hatch

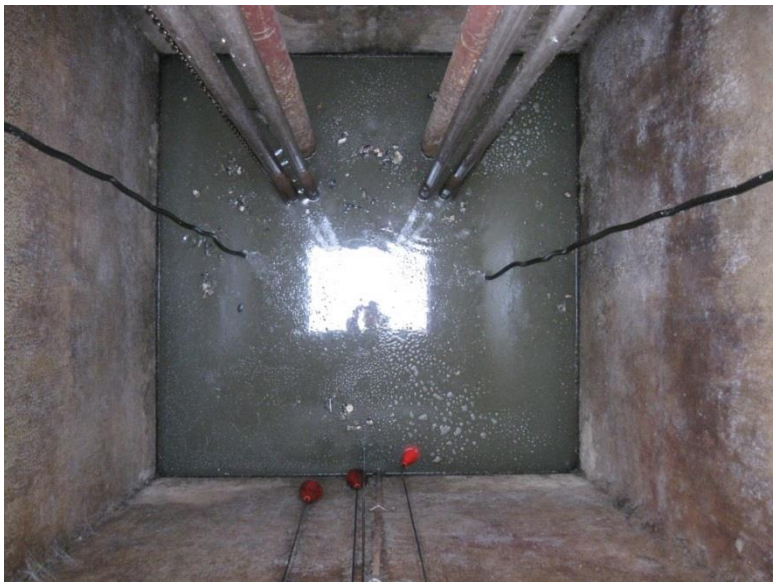

Wet Well Interior

Mechanical

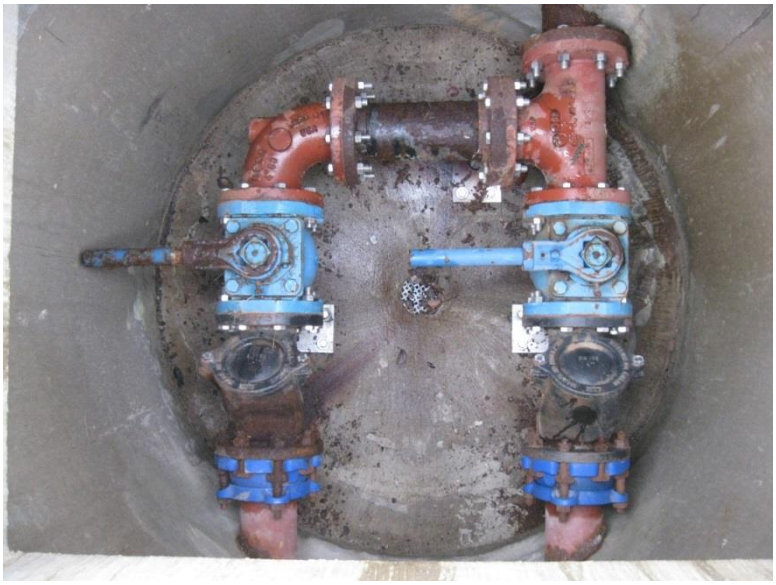

Check Valves – Corrosion Observed

Air Compressor in Cover- Signs of Corrosion

Electrical

Electrical Panel Facing North

Electrical Panel Mounted on Vertical Frame

Instrumentation/SCADA

Uplink RTU Inside Instrumentation Panel

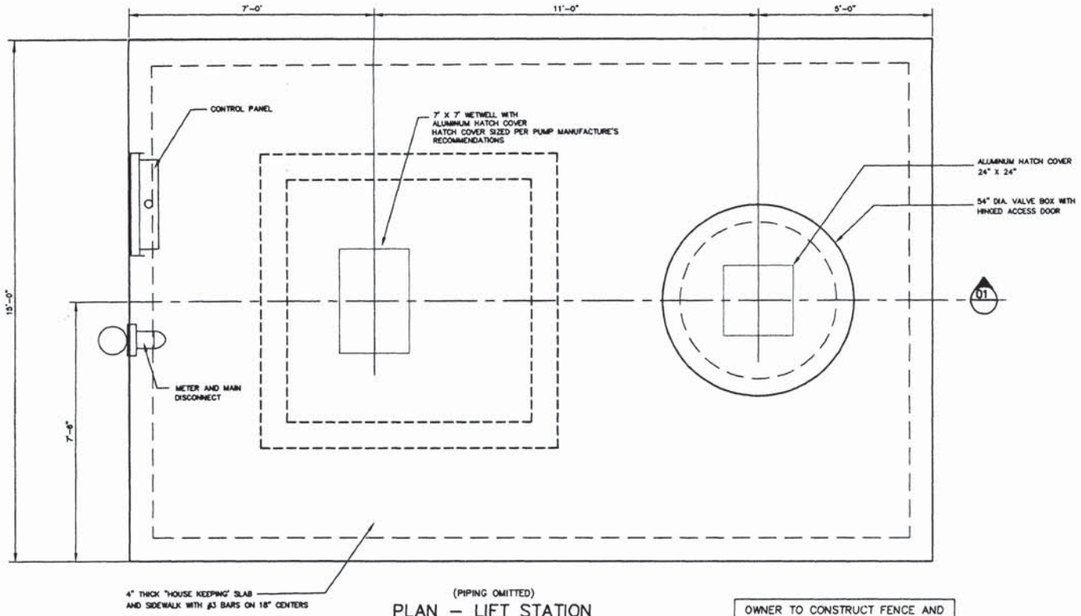

(PIPING OMITTED)

PLAN – LIFT STATION

SCALE: 1/2" = 1'-0"

OWNER TO CONSTRUCT FENCE AND GATE AROUND LIFT STATION SITE.

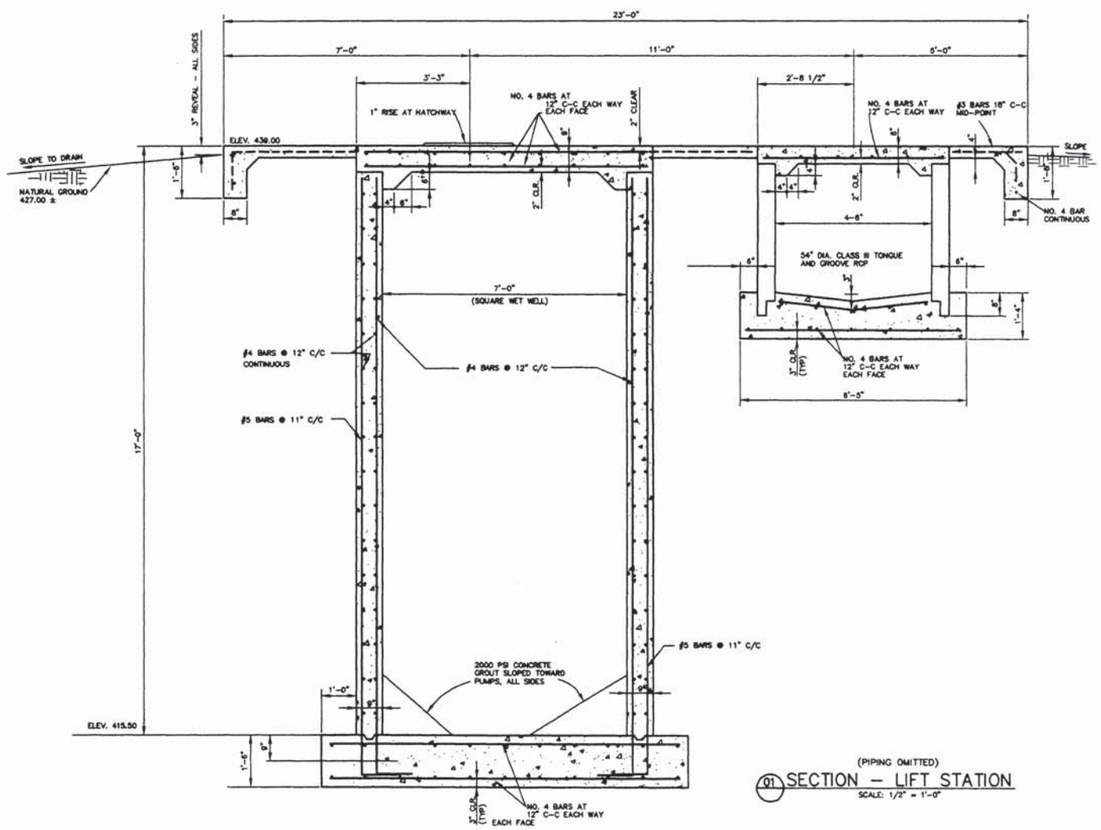

(PIPING OMITTED)

01 SECTION – LIFT STATION

SCALE: 1/2" = 1'-0"

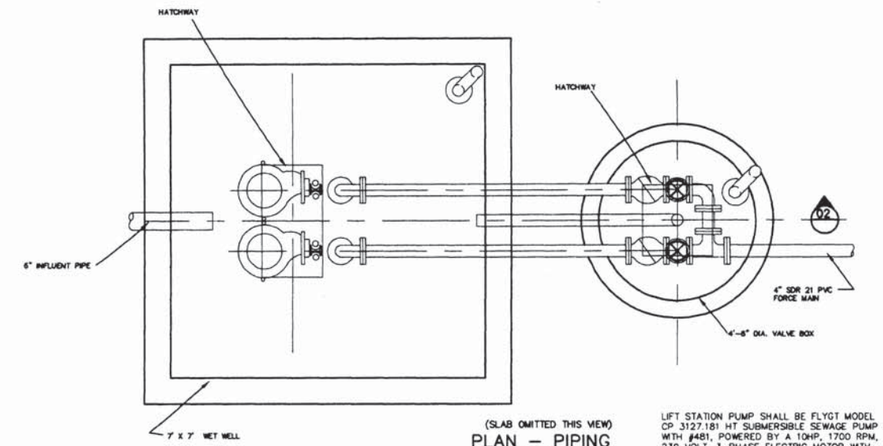

(SLAB OMITTED THIS VIEW)

PLAN – PIPING

SCALE: NONE

LIFT STATION PUMP SHALL BE FLYGT MODEL CP 3127.181 HT SUBMERSIBLE SEWAGE PUMP WITH #481, POWERED BY A 10HP, 1700 RPM, 230 VOLT, 3-PHASE ELECTRIC MOTOR WITH 40' OF POWER CABLE AND CONTROL CABLES.

CONTACT: YORK PUMPS
JIM OUBRE
LONGVIEW, TX
903-757-4700

RECORD DRAWING
APRIL 2008

THE ORIGINAL OF THIS DRAWING HAS BEEN AMENDED IN AN ATTEMPT TO REFLECT ACTUAL FINAL CONSTRUCTION. THIS RECORD DRAWING HAS BEEN PREPARED BASED ON CHANGE ORDERS APPROVED BY THE OWNER, THE CONTRACTOR'S NOTES, FIELD OBSERVATIONS, AND VARIOUS INFORMATION PROVIDED BY OTHERS. THE ENGINEER HAS NOT VERIFIED, AND DOES NOT WARRANT, THE ACCURACY AND/OR COMPLETENESS OF THIS INFORMATION AND SHALL NOT BE RESPONSIBLE FOR ANY ERRORS OR OMISSIONS THAT MAY BE INCORPORATED AS A RESULT OF ERRONEOUS INFORMATION PROVIDED BY OTHERS. ANY PERSON WORKING IN OR AROUND THE EFFECTIVE PROJECT AREA IS ADVISED TO VERIFY ALL INFORMATION SHOWN HEREON THROUGH INDEPENDENT INVESTIGATION.

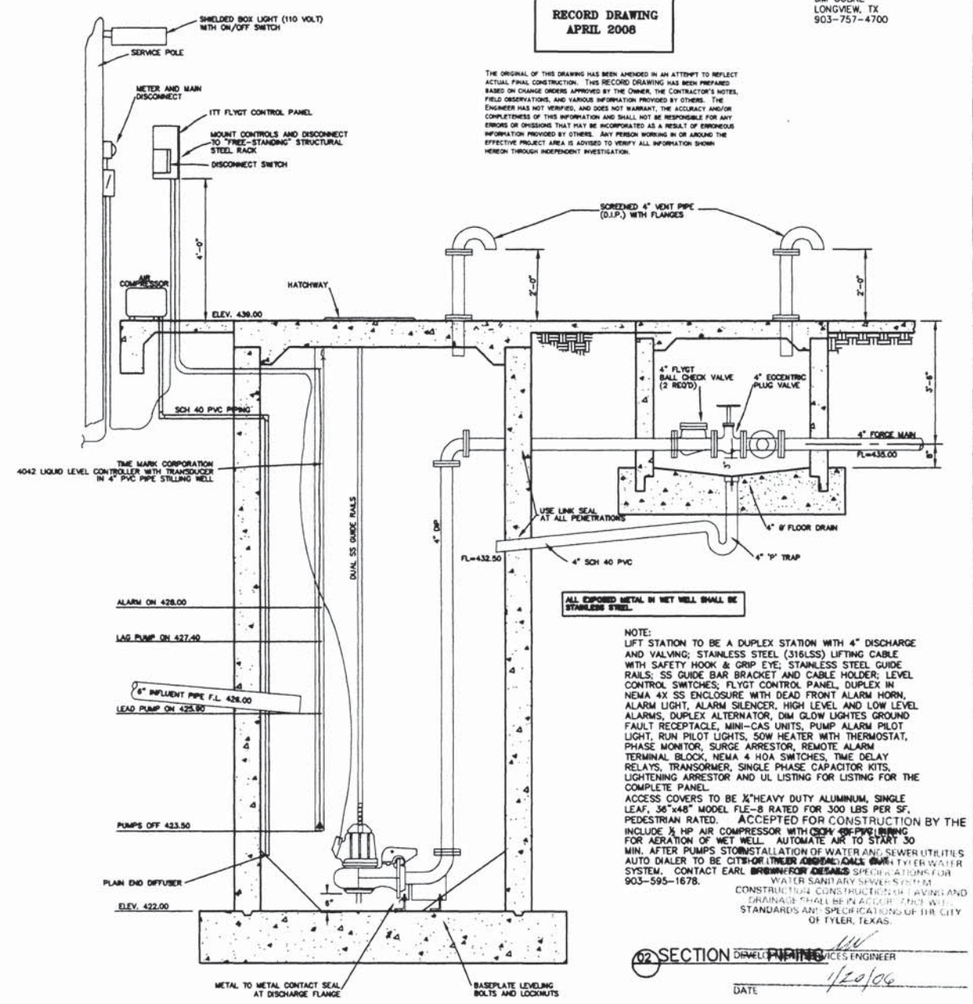

NOTE:
LIFT STATION TO BE A DUPLEX STATION WITH 4" DISCHARGE AND VALVING; STAINLESS STEEL (316LSS) LIFTING CABLE WITH SAFETY HOOK & GRIP EYE; STAINLESS STEEL GUIDE RAILS; SS GUIDE BAR BRACKET AND CABLE HOLDER; LEVEL CONTROL SWITCHES; FLYGT CONTROL PANEL, DUPLEX IN NEMA 4X SS ENCLOSURE WITH DEAD FRONT ALARM HORN, ALARM LIGHT, ALARM SILENCER, HIGH LEVEL AND LOW LEVEL ALARMS, DUPLEX ALTERNATOR, DIM GLOW LIGHTES GROUND FAULT RECEPTACLE, MINI-CAS UNITS, PUMP ALARM PILOT LIGHT, RUN PILOT LIGHTS, 50W HEATER WITH THERMOSTAT, PHASE MONITOR, SURGE ARRESTOR, REMOTE ALARM TERMINAL BLOCK, NEMA 4 HOA SWITCHES, TIME DELAY RELAYS, TRANSORMER, SINGLE PHASE CAPACITOR KITS, LIGHTENING ARRESTOR AND UL LISTING FOR LISTING FOR THE COMPLETE PANEL.
ACCESS COVERS TO BE ¼"HEAVY DUTY ALUMINUM, SINGLE LEAF, 36"x48" MODEL FLE-8 RATED FOR 300 LBS PER SF, PEDESTRIAN RATED. ACCEPTED FOR CONSTRUCTION BY THE
INCLUDE ½ HP AIR COMPRESSOR WITH OPEN AIR PIPELINING FOR AERATION OF WET WELL. AUTOMATE AIR TO START 30 MIN. AFTER PUMPS STOP. INSTALLATION OF WATER AND SEWER UTILITIES AUTO DIALER TO BE CITY OF TYLER APPROVAL. CALL CITY OF TYLER WATER SYSTEM. CONTACT EARL BROWN FOR DETAILS SPECIFICATIONS FOR WATER SANITARY SEWER SYSTEM.
CONSTRUCTION, CONSTRUCTION OF PAVING AND DRAINAGE SHALL BE IN ACCORDANCE WITH THE STANDARDS AND SPECIFICATIONS OF THE CITY OF TYLER, TEXAS.
903-595-1678.

DANIEL G. PHILLIPS, CITY SERVICES ENGINEER

DATE 1/20/06

02 SECTION – PIPING

DESIGNED BY:	RAB
DRAWN BY:	RAB
CHECKED BY:	
DATE:	
SCALE:	AS SHOWN

STATE OF TEXAS
ROBERT A. BREEDLOVE
82593
REGISTERED PROFESSIONAL ENGINEER
01-12-06

www.brannoncorp.com

The Brannon Corporation
Consulting Engineers
Land Development
Water Wastewater
Roads Drainage
Tyler, Texas
Longview, Texas

CONSTRUCTION PLANS
FOR
CASCADE UNIT 5
CASCADES PROPERTIES, LTD
TYLER, TEXAS

REVISIONS		
NO.	DATE	REMARKS
1	12/23/05	Change to Flygt pumps per City

CONTRACT NO. 05023

SHEET NO. 27

05023-LIFTSTATION.DWG © C.T. Brannon Corporation 2005

Shoreline LS

C-3127

Impeller/Motor/Nominal Sizes

PUMP MODEL	IMPELLER CODE	HP RATING CP	HP RATING CT CZ	HP RATING CS	VAC	RPM	D1	D2	D3	D4
3127 3Ø	411 LT	10.0	--	10.0	200 230/460 575	1750	8"	6"	8"	--
	412 LT	7.5	7.4	7.5			8"	6"	8"	8"
	**432 MT	10.0	--	10.0			6" or 8"	*4" 6"	6"	--
	**433 MT	7.5	7.4	7.5						*4" 6"
	**434 MT	7.5	6.4	7.5						
	**436 MT	7.5	6.4	7.5						
	442 LT	10.0	--	10.0			8"	6"	8"	--
	481 HT	10.0	--	--			4"	4"	--	--
	483 HT	10.0	--	10.0			4"	4"	4"	
	484 HT	10.0	--	10.0						
	485 HT	7.5	7.4	7.5						4"

** Also available with 4" volute and 4" x 4" discharge connection. * for CZ configuration

3127 3Ø	468 HT	---	---	HS	200 230/460 575	1750	--	4"	4"	--
		--	--	10.0						

PUMP MODEL	IMPELLER CODE	HP RATING CP	HP RATING CT	HP RATING CS	VAC	RPM	D1	D2	D3	D4
3127 1Ø	412 LT	7.6	--	7.6	230	1730	8"	6"	8"	--
	**433 MT **434 MT	7.6	--	7.6			4" 6" or 8"	4" 6"	6"	--
	462 HT 463 HT 484 HT 485 HT	7.6	--	7.6			4"	4"	4"	--

3127 1Ø	468 HT	---	---	HS	230	1730	--	4"	4"	--
		--	--	7.6						

LT= High Volume MT= Standard HT= High Head

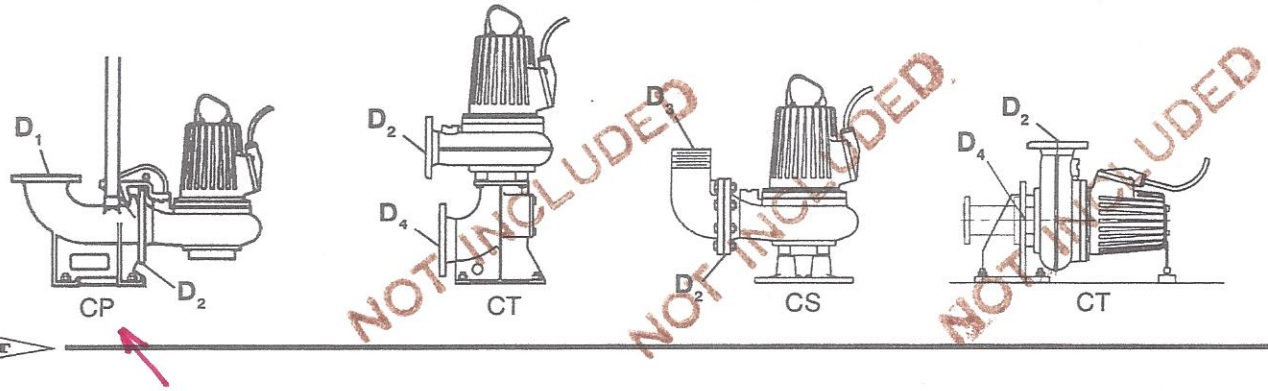

xylem

CP 3127 HT 3~ 481

Technical specification

Shoreline LS - 10HP

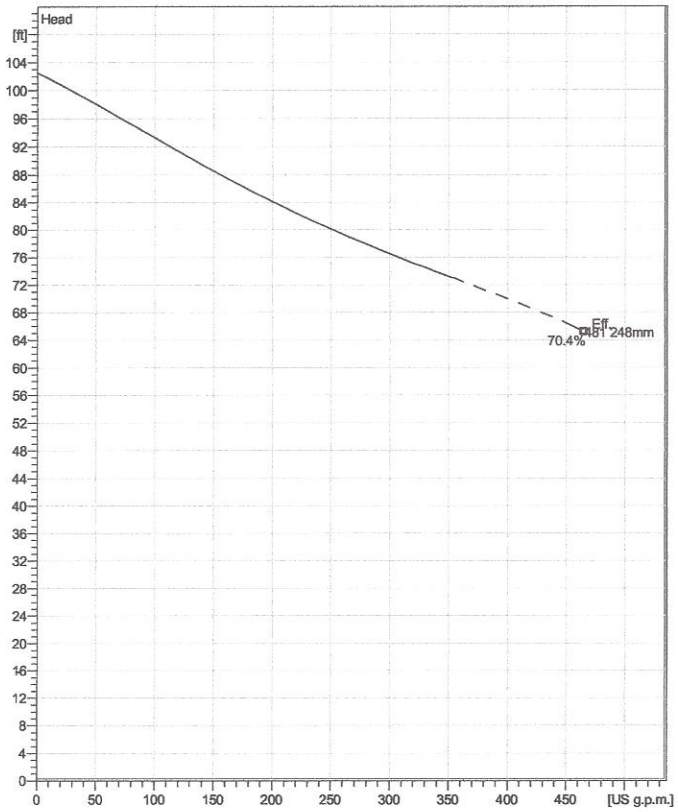

Water, pure *Curve ISO*

Installation: P - Semi permanent, Wet

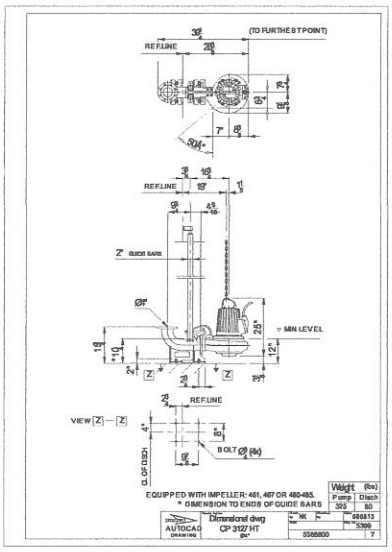

Note: Picture might not correspond to the current configuration.

General

Shrouded single or multi-channel impeller pumps with large throughlets and single volute pump casing for liquids containing solids and fibres. Cast iron design with double sealing technology. Some models available as stainless steel versions.

Impeller

Impeller material	Grey cast iron
Discharge Flange Diameter	3 15/16 inch
Suction Flange Diameter	3 15/16 inch
Impeller diameter	248 mm
Number of blades	1
Throughlet diameter	3 inch

Motor

Motor #	C3127.182 21-12-4AL-W 10hp Standard
Stator variant	12
Frequency	60 Hz
Rated voltage	230 V
Number of poles	4
Phases	3~
Rated power	10 hp
Rated current	25 A
Starting current	134 A
Rated speed	1720 rpm
Power factor	
1/1 Load	0.88
3/4 Load	0.86
1/2 Load	0.80
Motor efficiency	
1/1 Load	84.3 %
3/4 Load	86.5 %
1/2 Load	87.0 %

Configuration

Project	Project ID	Created by	Created on	Last update
			2017-04-26	

PERFORMANCE CURVE

PRODUCT	CP3127.181
TYPE	HT
DATE	2017-04-26
PROJECT	
CURVE NO	63-481-00-3702
ISSUE	1

	1/1-LOAD	3/4-LOAD	1/2-LOAD
POWER FACTOR	0.87	0.83	0.75
EFFICIENCY	84.5 %	85.0 %	83.5 %
MOTOR DATA	---	---	---

COMMENTS

INLET/OUTLET	-/ 4 inch
IMP. THROUGHLET	3.0 inch

RATED POWER	10	hp
STARTING CURRENT ...	75	A
RATED CURRENT ...	13	A
RATED SPEED	1745	rpm
TOT.MOM.OF INERTIA ...	0.12	kgm2
NO. OF BLADES	1	

IMPELLER DIAMETER	248 mm
MOTOR #	21-12-4AL
STATOR	38D
REV	11
FREQ.	60 Hz
PHASES	3
VOLTAGE	460 V
POLES	4
GEARTYPE	---
RATIO	---

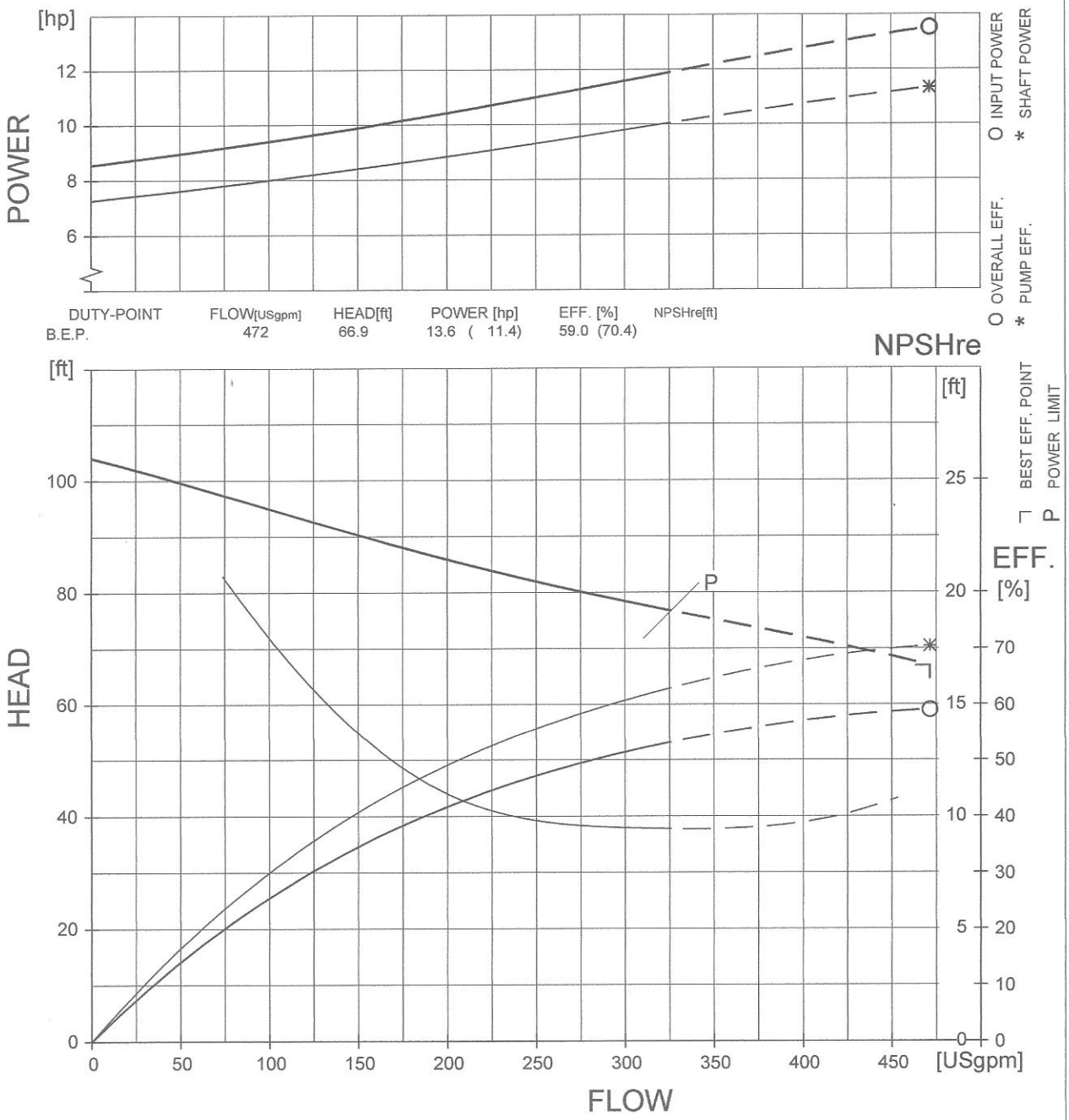

	HEAD	POWER [hp]	EFF. [%]	NPSHre[ft]
DUTY-POINT	FLOW[USgpm]			
B.E.P.	472	66.9	13.6 (11.4)	59.0 (70.4)

NPSHre = NPSH3% + min. operational margin

Performance with clear water and ambient temp 40 °C

HI B Curve

FLYPS3.1.0.0 (20050224)

xylem

CP 3127 HT 3~ 481

FLYGT

Performance curve

Pump

Discharge Flange Diameter	3 15/16 inch
Suction Flange Diameter	100 mm
Impeller diameter	9¾"
Number of blades	1
Throughlet diameter	3 inch

Motor

Motor #	C3127.182 21-12-4AL-W 10hp
Stator variant	12
Frequency	60 Hz
Rated voltage	230 V
Number of poles	4
Phases	3~
Rated power	10 hp
Rated current	25 A
Starting current	134 A
Rated speed	1720 rpm

Power factor	
1/1 Load	0.88
3/4 Load	0.86
1/2 Load	0.80

Motor efficiency	
1/1 Load	84.3 %
3/4 Load	86.5 %
1/2 Load	87.0 %

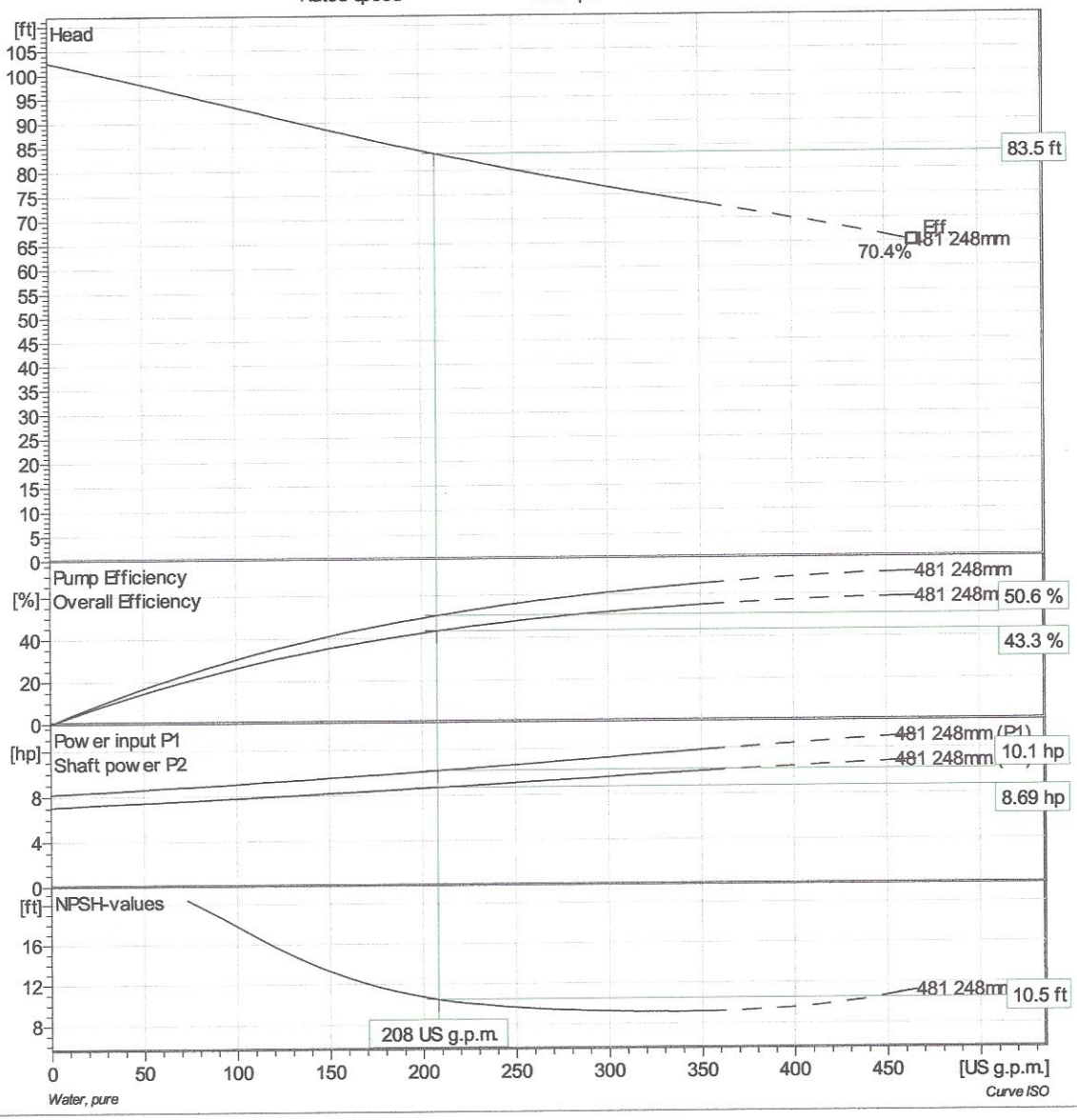

Duty point		Guarantee	
Flow	Head	ISO:1999	Grade
210 US g.p.m.	85 ft	No	

Project	Project ID	Created by	Created on	Last update
			2017-04-26	

xylem

CP 3127 HT 3~ 481

Duty Analysis

FLYGT

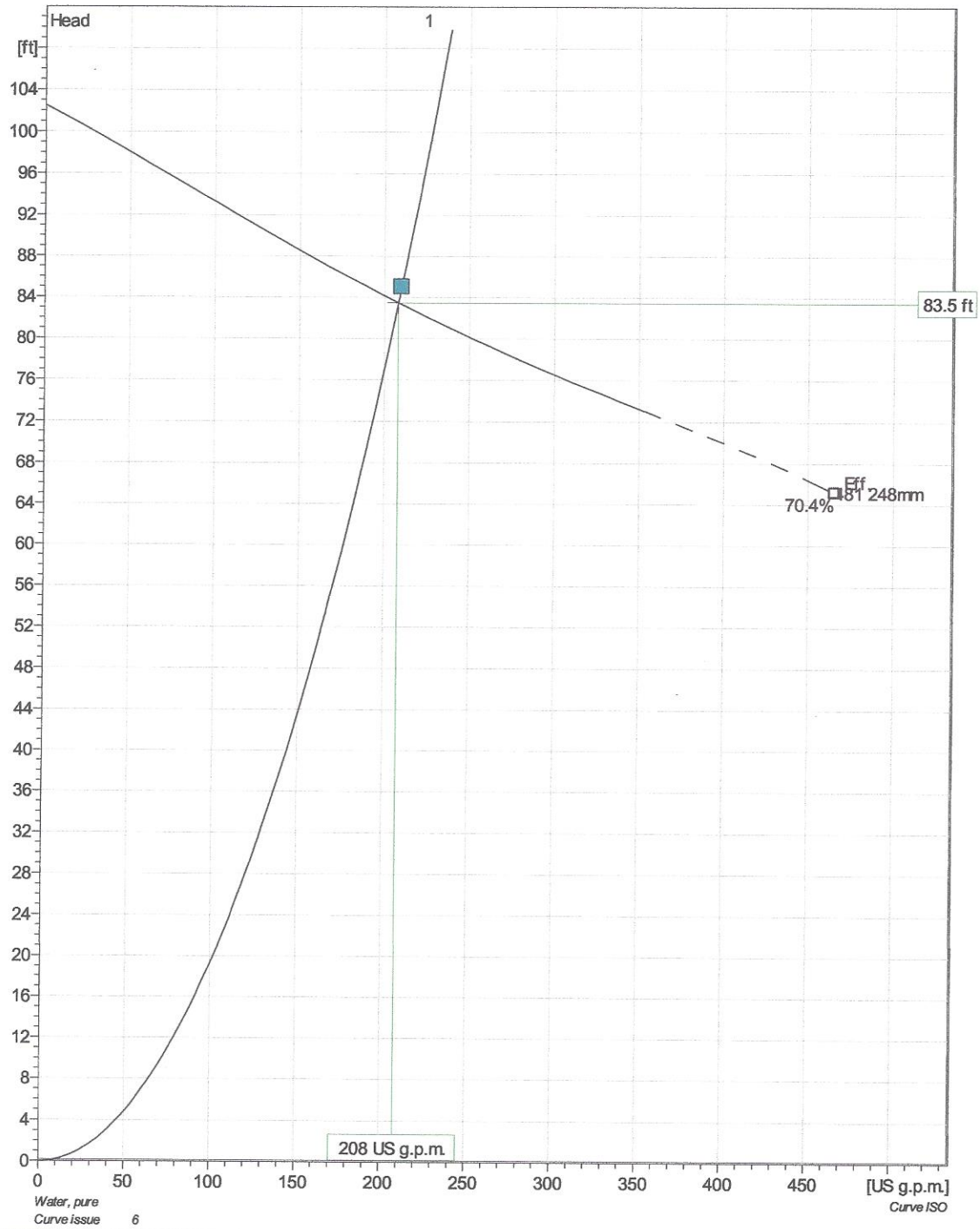

Pumps running /System	Individual pump			Total					
	Flow	Head	Shaft power	Flow	Head	Shaft power	Pump eff.	Specific energy	NPSHre
1	208 US g.p.m.	83.5 ft	8.69 hp	208 US g.p.m.	83.5 ft	8.69 hp	50.6 %	606 kWh/US MG	10.5 ft

Project	Project ID	Created by	Created on	Last update
			2017-04-26	

xylem

CP 3127 HT 3~ 481

VFD Curve

FLYGT

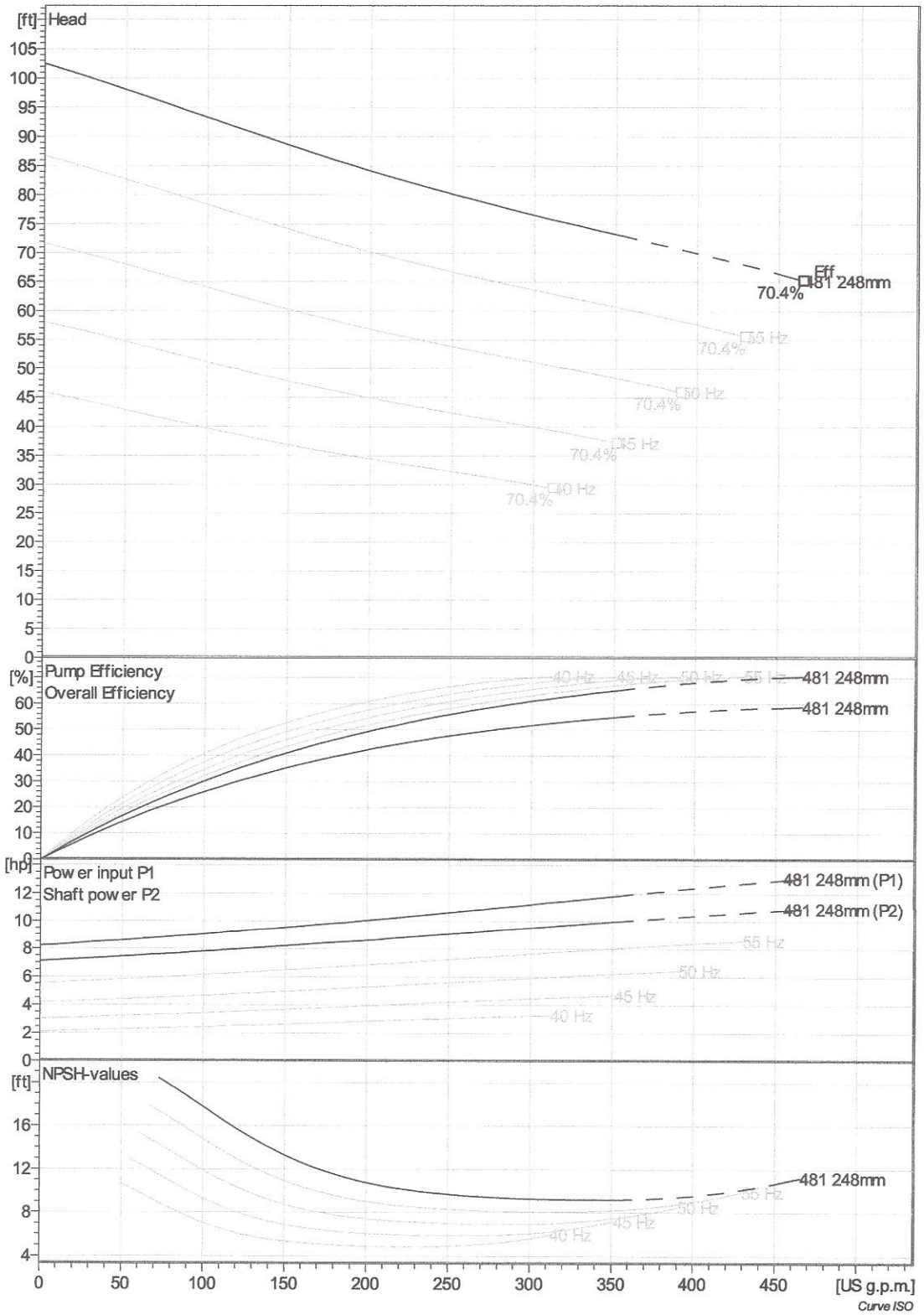

Project	Project ID	Created by	Created on	Last update
			2017-04-26	

xylem

CP 3127 HT 3~ 481

Dimensional drawing

FLYGT

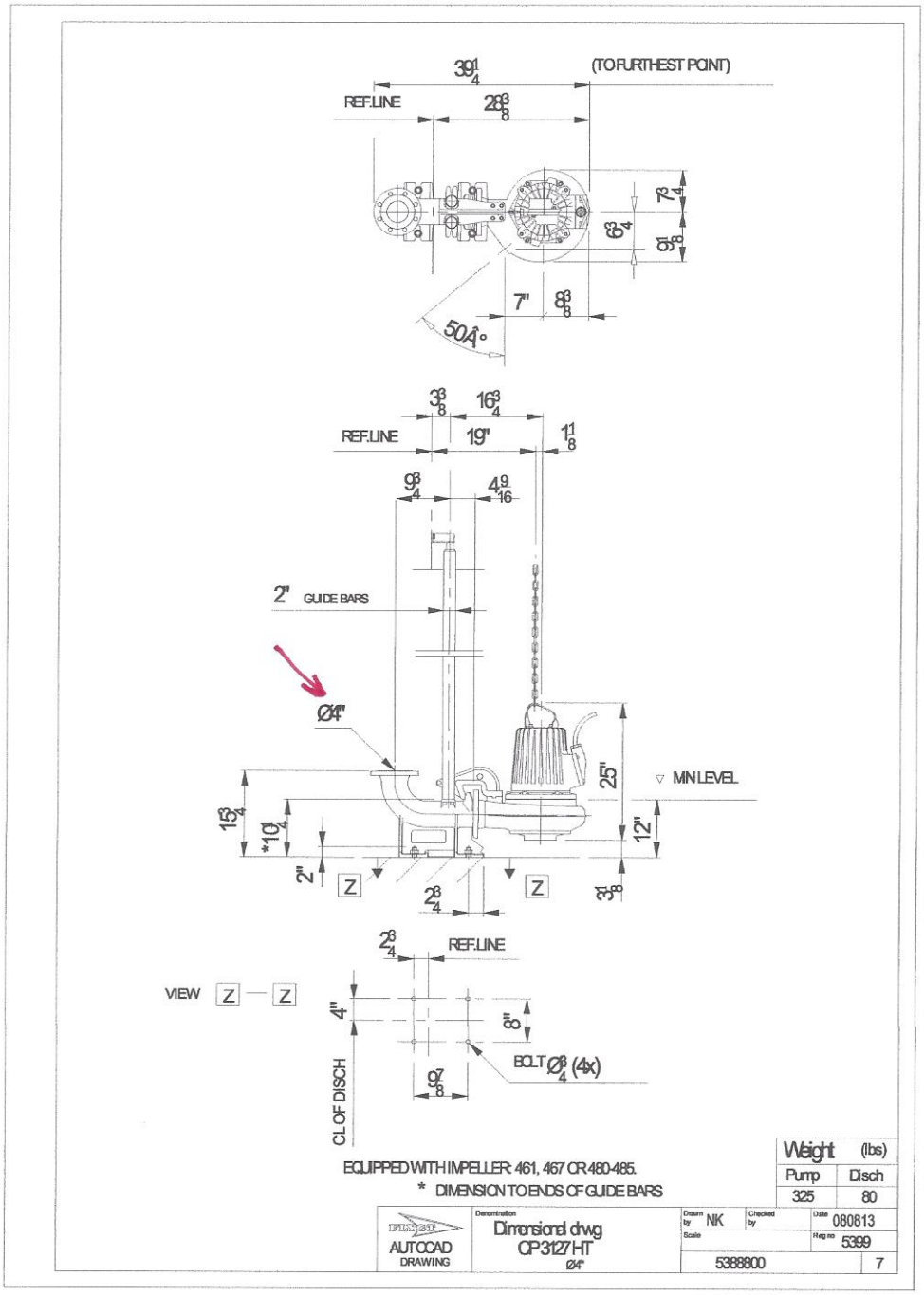

Project	Project ID	Created by	Created on	Last update
			2017-04-26	

STEWART LIFT STATION

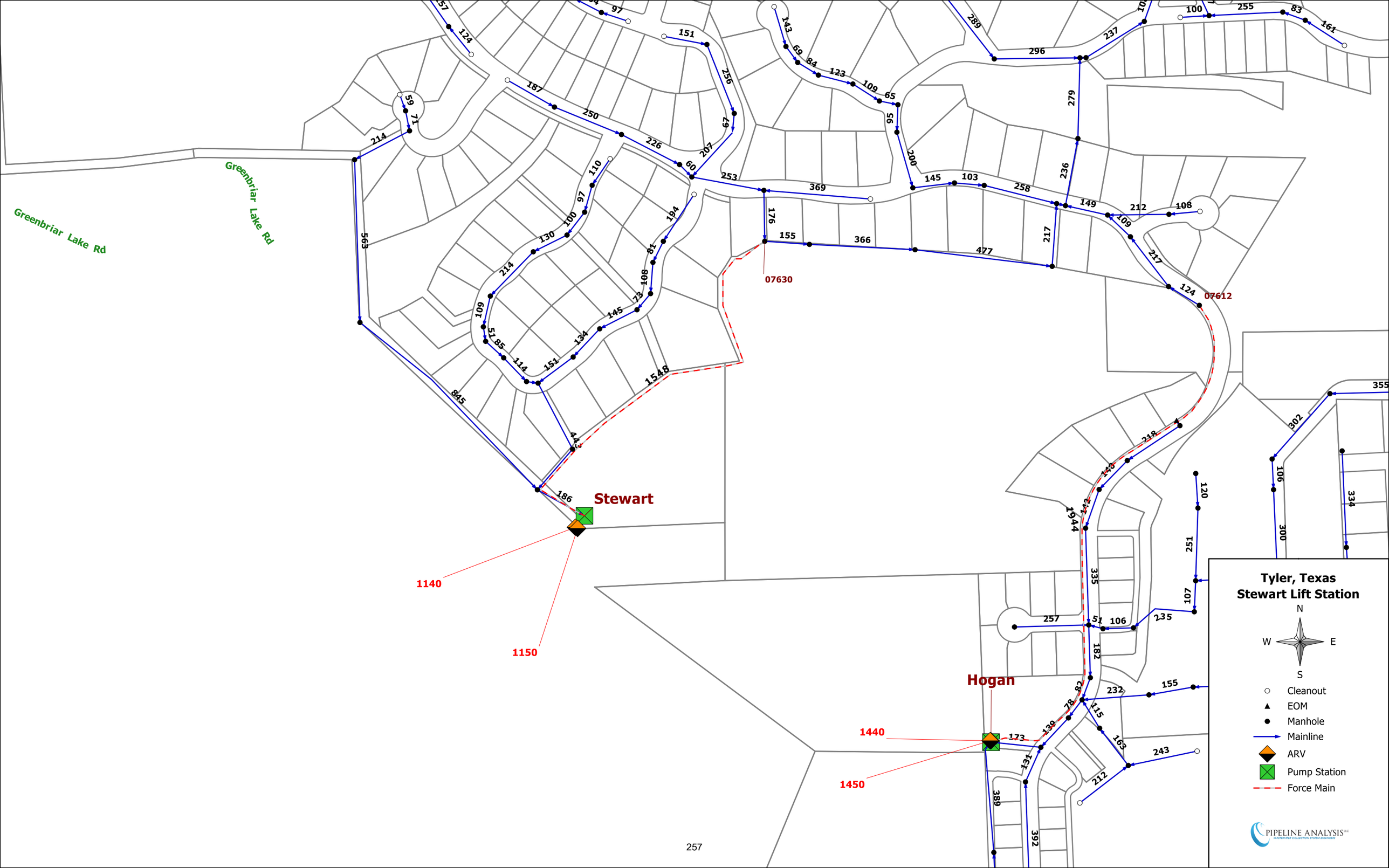
Tyler, Texas
Stewart Lift Station
N
W
E
S
Cleanout
EOM
Manhole
Mainline
ARV
Pump Station
Force Main
PIPELINE ANALYSIS LLC
Greenbriar Lake Rd
Greenbriar Lake Rd
Stewart
Hogan
07630
07612
1140
1150
1440
1450
1548
1944

N 32° 19.029'
95° 21.785'

Tyler Water Utilities - Lift Station Assessment Form

Lift Station Name STEWART **Type** Submersible
Location/Address 2820 Stewart Way
Lift Station Asset ID **Number of Pumps** 2
Firm Capacity in GPM (all pumps operating)
Firm Capacity in GPM (largest pump out of service)
Inspector Don White **Date** Dec 18, 2017
City Works Work Order

Building and Grounds

			Good	Fair	Poor	Critical	N/A
Building Structure	Type:	NONE					
Building Roof/Ceiling			○	○	○	○	○
Building Finishes			○	○	○	○	○
Building Doors and Windows			○	○	○	○	○
Building HVAC	Type:		○	○	○	○	○
Fencing	Type:	COATED CHAIN LINK	●	○	○	○	○
DOUBLE 12' VEHICULAR 5' PED. @ METER Gates	Type:	"	●	○	○	○	○
Site/Grounds	Size:	26'-6"W x 16'D	●	○	○	○	○
Lighting			●	○	○	○	○
Pavement (Driving)	Type:	Concrete	●	○	○	○	○
Drainage	Type:	Surface	●	○	○	○	○
Odor	Comment:	NONE	●	○	○	○	○
Odor Control System	Type:	—	○	○	○	○	○
Odor Control Mechanical			○	○	○	○	○
Odor Control Media	Type:		○	○	○	○	○
Noise			○	○	○	○	○
Overall Site Appearance			●	○	○	○	○

Comments Wet well slab above natural ground

49 63
17 25
86 88

Structural

			Good	Fair	Poor	Critical	N/A
Wet Well	Size: ~8'-2"x8'-2"						
Debris			●	○	○	○	○
Fats, oils, and grease			●	○	○	○	○
Ventilation	Pipe		●	○	○	○	○
Walls	Material:	Concrete	○	●	○	○	○
Coatings	Type:		○	●	○	○	○
Access Hatches	Number:	1 METAL 4x3	●	○	○	○	○
Slab	CONCRETE 16'x 8'-6" COMBINATION WET WELL/VALVE VAULT		●	○	○	○	○
Dry Well/Valve Vault							
Walls 4'-6" ϕ x5' Deep	Material:	Concrete	●	○	○	○	○
Coatings	Type:	✓	○	●	○	○	○
~~Grating~~/Hatching	Number:	1 METAL 2'-6"x2'	●	○	○	○	○
~~Stairway/Ladder~~	Material:		○	○	○	○	○
Sump/~~Pump~~	Number:	Floor Drain	●	○	○	○	○
Ventilation	Type:	PIPE	●	○	○	○	○

1
39
15
54

Comments Aggregate exposure in wet well walls below high water line. Guide Rails - Good, Chains - Good, Electric conduits - Good Coating on Valve Vault Flaking

Mechanical

			Good	Fair	Poor	Critical	N/A
Bypass Connection	(Circle) YES / NO						
Piping and Valves							
Suction Valve	Number:		○	○	○	○	○
Check Valve	Number:	2- 4" DI	○	○	●	○	○
Discharge Valve	Number:	2- 4" DI	○	○	●	○	○

Mechanical (continued)

			Good	Fair	Poor	Critical	N/A
Riser Piping	Material:	4" DI	○	○	●	○	○

Discharge Piping	Material: 4" D.I.	○	○	●	○	○
Fittings	Material: 4" DI	○	○	●	○	○

Comments Significant corrosion on all elements. compressor for wet well airation.

Pumps

Pump 1 Asset ID _____ Make _____ Model _____

Capacity _____ GPM

Impeller Dia./Code _____ Horsepower _____

	Good	Fair	Poor	Critical	N/A
Pump	○	○	○	○	○
Seals	○	○	○	○	○
Motor	○	○	○	○	○
Shaft	○	○	○	○	○
Electrical Cable					
Noise	○	○	○	○	○
Vibration/Heat	○	○	○	○	○

Pump 1 *The following components are to be inspected during pump disassembly*

Oil	○	○	○	○	○
Impeller	○	○	○	○	○
Packing Rings	○	○	○	○	○
Internal Seals	○	○	○	○	○

Pump 2 Asset ID _____ Make _____ Model _____

Capacity _____ GPM

Impeller Dia./Code _____ Horsepower _____

	Good	Fair	Poor	Critical	N/A
Pump	○	○	○	○	○
Seals	○	○	○	○	○
Motor	○	○	○	○	○
Shaft	○	○	○	○	○
Electrical Cable					
Noise	○	○	○	○	○
Vibration/Heat	○	○	○	○	○

Pump 2 *The following components are to be inspected during pump disassembly*

Oil	○	○	○	○	○
Impeller	○	○	○	○	○
Packing Rings	○	○	○	○	○
Internal Seals	○	○	○	○	○

Pump 3 Asset ID _____ Make _____ Model _____

Capacity _____ GPM

Impeller Dia./Code _____ Horsepower _____

	Good	Fair	Poor	Critical	N/A
Pump	○	○	○	○	○
Seals	○	○	○	○	○
Motor	○	○	○	○	○
Shaft	○	○	○	○	○
Electrical Cable					
Noise	○	○	○	○	○
Vibration/Heat	○	○	○	○	○

Pump 3 *The following components are to be inspected during pump disassembly*

	Good	Fair	Poor	Critical	N/A
Oil	○	○	○	○	○
Impeller	○	○	○	○	○
Packing Rings	○	○	○	○	○
Internal Seals	○	○	○	○	○

Pump 4 Asset ID _____ Make _____ Model _____

Capacity _____ GPM

Impeller Dia./Code _____ Horsepower _____

	Good	Fair	Poor	Critical	N/A
Pump	○	○	○	○	○
Seals	○	○	○	○	○
Motor	○	○	○	○	○
Shaft	○	○	○	○	○
Electrical Cable					
Noise	○	○	○	○	○
Vibration/Heat	○	○	○	○	○

Pump 4 *The following components are to be inspected during pump disassembly*

Oil	○	○	○	○	○
Impeller	○	○	○	○	○
Packing Rings	○	○	○	○	○
Internal Seals	○	○	○	○	○

Pump 5 Asset ID _____ Make _____ Model _____

Capacity _____ GPM

Impeller Dia./Code _____ Horsepower _____

	Good	Fair	Poor	Critical	N/A
Pump	○	○	○	○	○
Seals	○	○	○	○	○
Motor	○	○	○	○	○
Shaft	○	○	○	○	○
Electrical Cable					
Noise	○	○	○	○	○
Vibration/Heat	○	○	○	○	○

Pump 5 *The following components are to be inspected during pump disassembly*

Oil	○	○	○	○	○
Impeller	○	○	○	○	○
Packing Rings	○	○	○	○	○
Internal Seals	○	○	○	○	○

Pump 6 Asset ID _____ Make _____ Model _____

Capacity _____ GPM

Impeller Dia./Code _____ Horsepower _____

	Good	Fair	Poor	Critical	N/A
Pump	○	○	○	○	○
Seals	○	○	○	○	○
Motor	○	○	○	○	○
Shaft	○	○	○	○	○
Electrical Cable	○	○	○	○	○
Noise	○	○	○	○	○
Vibration/Heat	○	○	○	○	○

Pump 6 *The following components are to be inspected during pump disassembly*

	Good	Fair	Poor	Critical	N/A
Oil	○	○	○	○	○
Impeller	○	○	○	○	○
Packing Rings	○	○	○	○	○
Internal Seals	○	○	○	○	○

Electrical System

			Good	Fair	Poor	Critical	N/A
Electrical System Power	Volt/Phase:						
Panel/Enclosures	NEMA4X (YES)	NO	●	○	○	○	○
Transformers (AEP)			○	○	○	○	○
Disconnect	Type:		○	○	○	○	○
Generator	KW	NO	○	○	○	○	●
Transfer Switch			○	○	○	○	○
Electrical System Control							
Breakers	Type:		○	○	○	○	○
Speed control/VFD	Type:		○	○	○	○	○
Starters	Type:		○	○	○	○	○
Control Relays	Type:		○	○	○	○	○

Comments

Instrumentation/SCADA

			Good	Fair	Poor	Critical	N/A
Panel	NEMA4X (YES)	NO	●	○	○	○	○
Instrumentation							
Level	Type: Floats		●	○	○	○	○
Flow	Type:		○	○	○	○	○

Instrumentation/SCADA (continued)

			Good	Fair	Poor	Critical	N/A
PLC	Type:		○	○	○	○	○
SCADA			○	○	○	○	○
RTU	Type: Uplink 2500		●	○	○	○	○
Radio/Antenna	Type: w/uplink		●	○	○	○	○

Comments Visual and Sound Alarm

Building and Grounds

Lift Station Perimeter and Gate

Lift Station Wet Well Slab

Structural

Wet Well Interior

Valve Vault Interior

Mechanical

Check Valves With Significant Corrosion

Air Compressor For Wet Well Aeration

Wet Well Piping Showing Signs of Corrosion

Electrical

Electrical Panel

Instrumentation/SCADA

Front of Instrumentation Panel

Uplink RTU Inside Instrumentation Panel

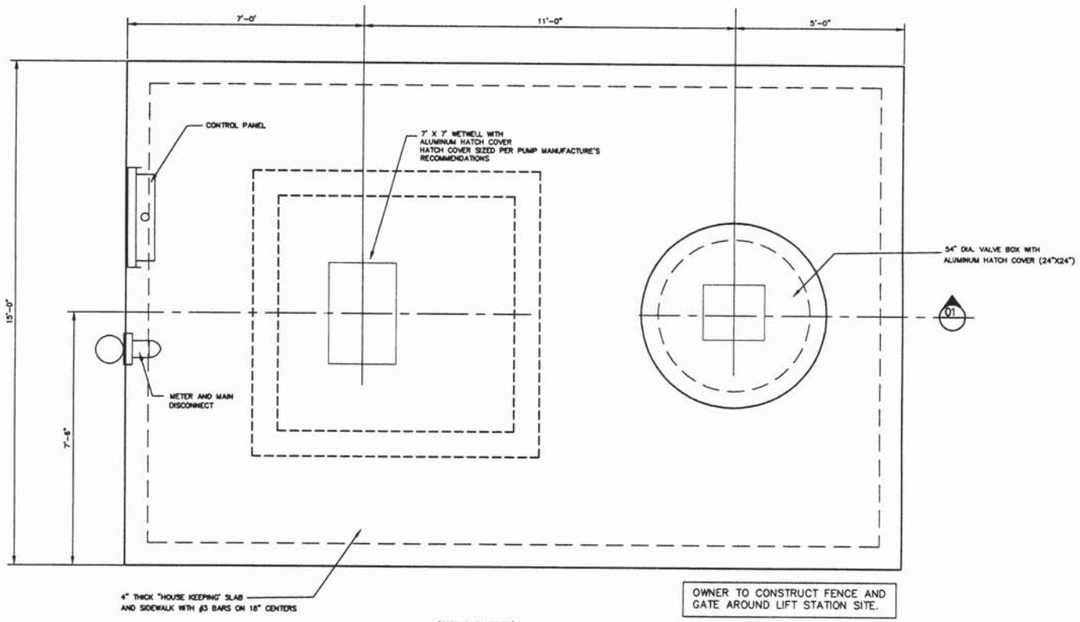

OWNER TO CONSTRUCT FENCE AND GATE AROUND LIFT STATION SITE.

(PIPING OMITTED)

PLAN – LIFT STATION

SCALE: 1/2" = 1'-0"

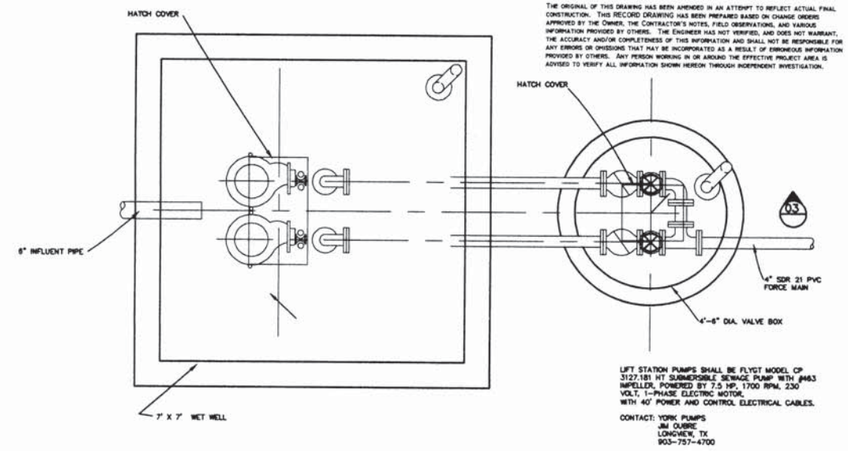

(SLAB OMITTED THIS VIEW)

PLAN – PIPING

SCALE: NONE

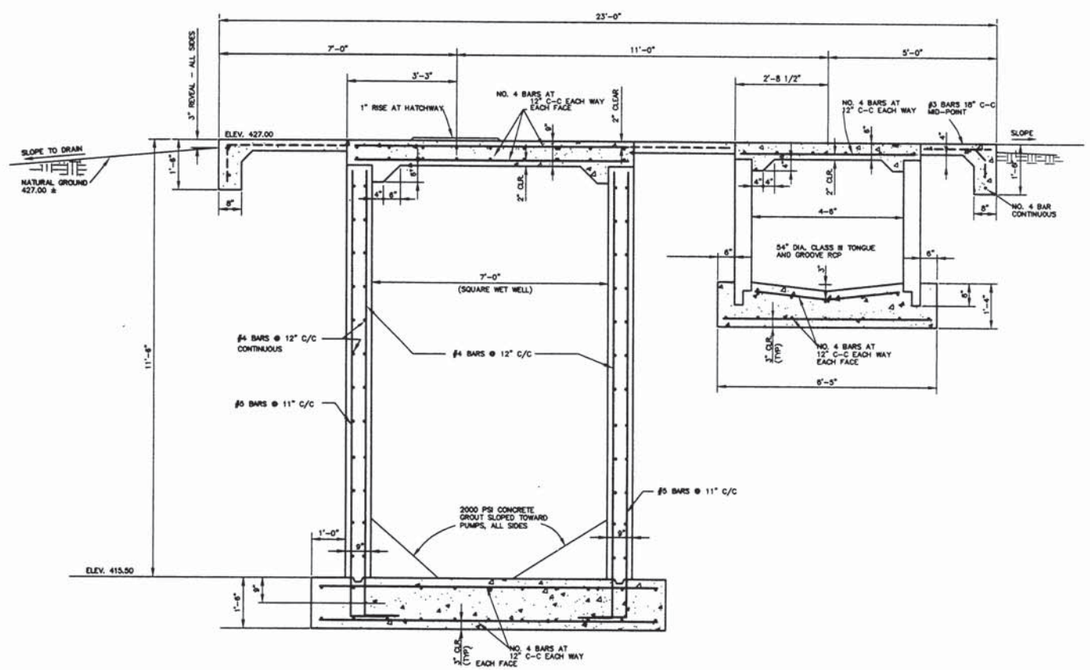

(PIPING OMITTED)

01 SECTION – LIFT STATION

SCALE: 1/2" = 1'-0"

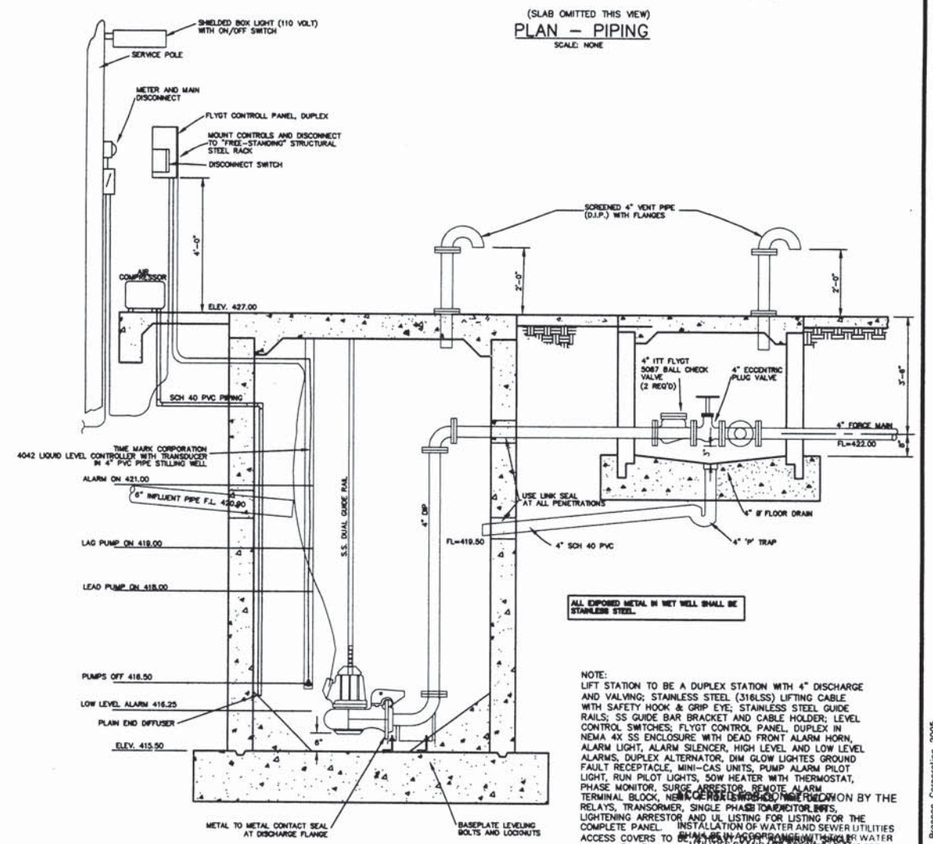

03 SECTION – PIPING

SCALE: 1/2" = 1'-0"

RECORD DRAWING
DECEMBER 2006

THE ORIGINAL OF THIS DRAWING HAS BEEN AMENDED IN AN ATTEMPT TO REFLECT ACTUAL FINAL CONSTRUCTION. THIS RECORD DRAWING HAS BEEN PREPARED BASED ON CHANGE ORDERS APPROVED BY THE OWNER, THE CONTRACTOR'S NOTES, FIELD OBSERVATIONS, AND VARIOUS INFORMATION PROVIDED BY OTHERS. THE ENGINEER HAS NOT VERIFIED, AND DOES NOT WARRANT, THE ACCURACY AND/OR COMPLETENESS OF THIS INFORMATION AND SHALL NOT BE RESPONSIBLE FOR ANY ERRORS OR OMISSIONS THAT MAY BE INCORPORATED AS A RESULT OF ERRONEOUS INFORMATION PROVIDED BY OTHERS. ANY PERSON WORKING IN OR AROUND THE EFFECTIVE PROJECT AREA IS ADVISED TO VERIFY ALL INFORMATION SHOWN HEREON THROUGH INDEPENDENT INVESTIGATION.

NOTE:
LIFT STATION TO BE A DUPLEX STATION WITH 4" DISCHARGE AND VALVING; STAINLESS STEEL (316LSS) LIFTING CABLE WITH SAFETY HOOK & GRIP EYE; STAINLESS STEEL GUIDE RAILS; SS GUIDE BAR BRACKET AND CABLE HOLDER; LEVEL CONTROL SWITCHES; FLYGT CONTROL PANEL, DUPLEX IN NEMA 4X SS ENCLOSURE WITH DEAD FRONT ALARM HORN, ALARM LIGHT, ALARM SILENCER, HIGH LEVEL AND LOW LEVEL ALARMS, DUPLEX ALTERNATOR, DIM GLOW LIGHTES GROUND FAULT RECEPTACLE, MINI-CAS UNITS, PUMP ALARM PILOT LIGHT, RUN PILOT LIGHTS, 50W HEATER WITH THERMOSTAT, PHASE MONITOR, SURGE ARRESTOR, REMOTE ALARM TERMINAL BLOCK, NEMA 4X FIBERGLASS ENCLOSURE FOR THE RELAYS, TRANSORMER, SINGLE PHASE TRANSDUCTOR BARS, LIGHTENING ARRESTOR AND UL LISTING FOR LISTING FOR THE COMPLETE PANEL. INSTALLATION OF WATER AND SEWER UTILITIES ACCESS COVERS TO BE ALTERNATE COVER WITH SINGLE WATER LEAF, 36"x48" MODEL FOR WATER/SANITARY SEWER SYSTEM PEDESTRIAN RATED. CONSTRUCTION, CONSTRUCTION OF PAVING AND INCLUDE ½ HP AIR COMPRESSOR AND SS DIFFUSER WITH FOR AERATION OF WET WELL AS STANDARD PER CITY STANDARDS. 30 MIN. AFTER PUMPS STOP. AUTO DIALER TO BE CITY OF TYLER DIGITAL CALL OUT SYSTEM. CONTACT EARL BROWN FOR DETAILS 903-595-1678.

APPROVED BY THE CITY OF TYLER, TEXAS

DEVELOPMENT SERVICES ENGINEER

DATE 11/1/06

DESIGNED BY:	RAB
DRAWN BY:	RAB
CHECKED BY:	
DATE:	
SCALE:	AS SHOWN

STATE OF TEXAS
ROBERT A. BREEDLOVE
82593
REGISTERED PROFESSIONAL ENGINEER
12-22-05

www.brannoncorp.com

The Brannon Corporation

ENGINEERS, SURVEYORS, & URBAN PLANNERS

1321 SOUTH BROADWAY

TYLER, TEXAS 75701

(903) 597-2122
(903) 597-3346 FAX

CONSTRUCTION PLANS
CASCADES ESTATES &
CASCADES UNIT 4
CASCADES PROPERTIES, LTD
TYLER, TEXAS

REVISIONS

NO.	DATE	REMARKS
1	11/9/05	TWU Review comments
2	11/23/05	Revise pump selection
3	12/22/05	Revise to Flygt per City comments

CONTRACT NO. 05023

SHEET NO. 43

05023-LIFTSTATION.DWG © C.T. Brannon Corporation 2005

Stewart LS

C-3127

Impeller/Motor/Nominal Sizes

PUMP MODEL	IMPELLER CODE	HP RATING CP	HP RATING CT CZ	HP RATING CS	VAC	RPM	D1	D2	D3	D4
3127 3Ø	411 LT	10.0	--	10.0	200 230/460 575	1750	8"	6"	8"	--
	412 LT	7.5	7.4	7.5			8"	6"	8"	8"
	**432 MT	10.0	--	10.0			6" or 8"	*4" 6"	6"	--
	**433 MT	7.5	7.4	7.5						*4" 6"
	**434 MT	7.5	6.4	7.5						
	**436 MT	7.5	6.4	7.5						
	442 LT	10.0	--	10.0			8"	6"	8"	--
	481 HT	10.0	--	--			4"	4"	--	--
	483 HT	10.0	--	10.0			4"	4"	4"	
	484 HT	10.0	--	10.0						
	485 HT	7.5	7.4	7.5						4"

** Also available with 4" volute and 4" x 4" discharge connection. * for CZ configuration

3127 3Ø	468 HT	---	---	HS	200 230/460 575	1750	--	4"	4"	--
		--	--	10.0						

PUMP MODEL	IMPELLER CODE	HP RATING CP	HP RATING CT	HP RATING CS	VAC	RPM	D1	D2	D3	D4
3127 1Ø	412 LT	7.6	--	7.6	230	1730	8"	6"	8"	--
	**433 MT **434 MT	7.6	--	7.6			4" 6" or 8"	4" 6"	6"	--
	462 HT 463 HT 484 HT 485 HT	7.6	--	7.6			4"	4"	4"	--

3127 1Ø	468 HT	---	---	HS	230	1730	--	4"	4"	--
		--	--	7.6						

LT= High Volume MT= Standard HT= High Head

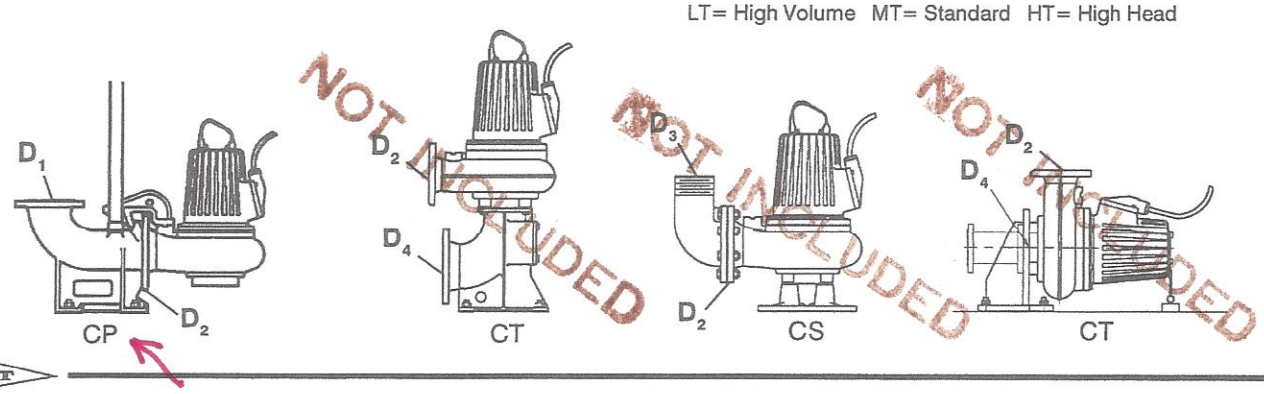

PERFORMANCE CURVE

PRODUCT	TYPE
CP3127.181	HT

DATE	PROJECT	CURVE NO	ISSUE
2017-04-26		61-463-00-3006	1

	1/1-LOAD	3/4-LOAD	1/2-LOAD
POWER FACTOR	0.96	0.99	1.00
EFFICIENCY	83.0 %	84.5 %	83.0 %
MOTOR DATA	---	---	---

RATED POWER	7.5	hp
STARTING CURRENT ...	66	A
RATED CURRENT ...	30	A
RATED SPEED	1745	rpm
TOT.MOM.OF INERTIA ...	---	
NO. OF BLADES	1	

IMPELLER DIAMETER: 231 mm

MOTOR #	STATOR	REV
21-12-4AL	12-	13

FREQ.	PHASES	VOLTAGE	POLES
60 Hz	1	230 V	4

GEARTYPE	RATIO
---	---

COMMENTS: 1phase impeller

units in US terms

INLET/OUTLET	IMP. THROUGHLET
-/ 4 inch	1.8 inch

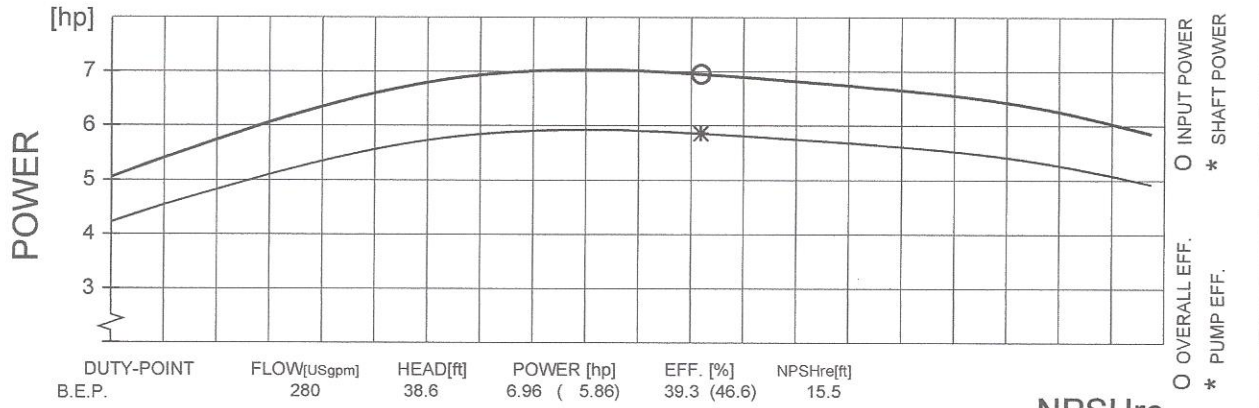

DUTY-POINT	FLOW[USgpm]	HEAD[ft]	POWER [hp]	EFF. [%]	NPSHre[ft]
B.E.P.	280	38.6	6.96 (5.86)	39.3 (46.6)	15.5

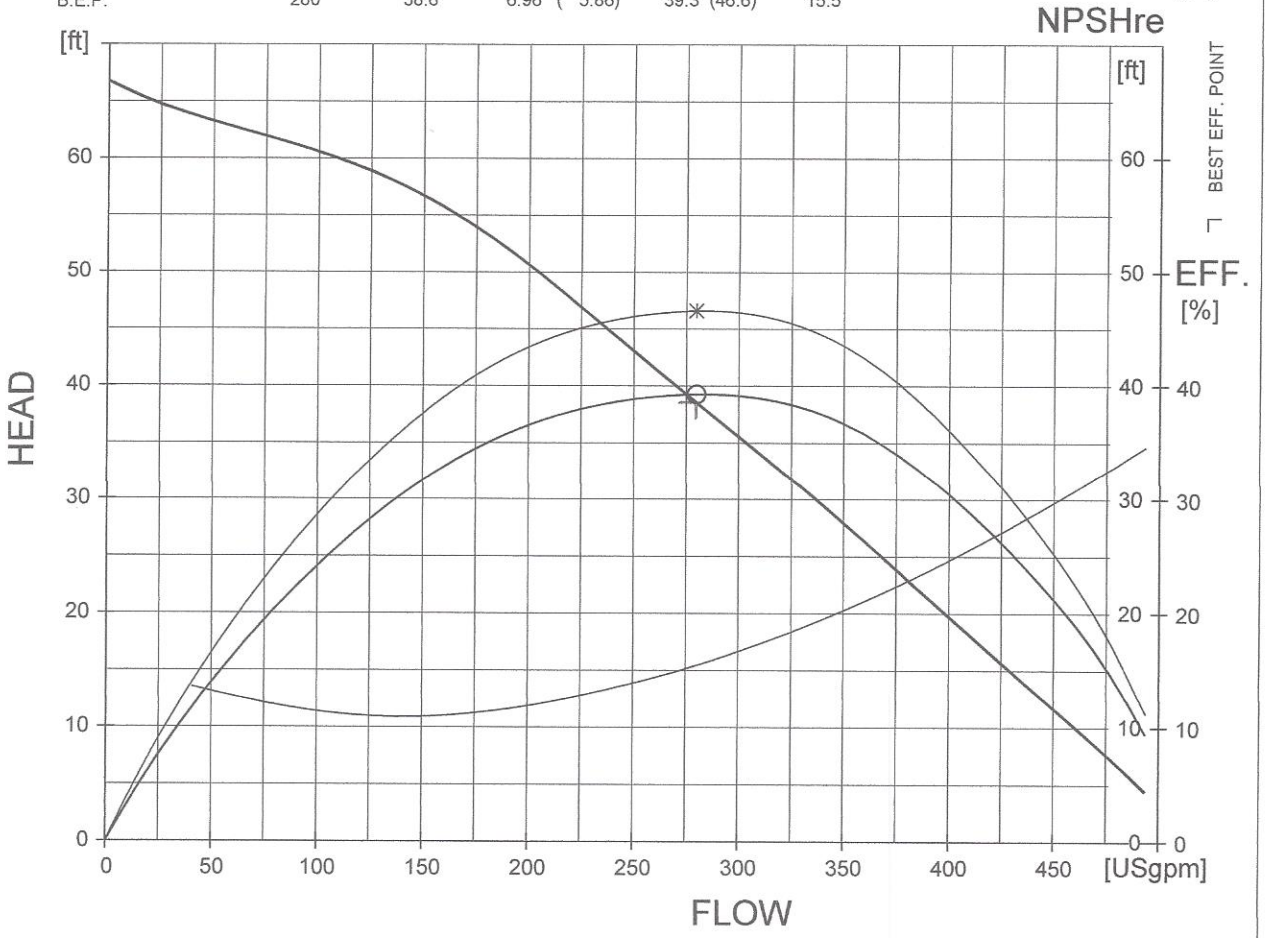

FLYPS3.1.0.0 (20050224)

NPSHre = NPSH3% + min. operational margin

Performance with clear water and ambient temp 40 °C

HI B Curve

xylem

CP 3127 HT 3~ ~~485~~ 463

Dimensional drawing

FLYGT

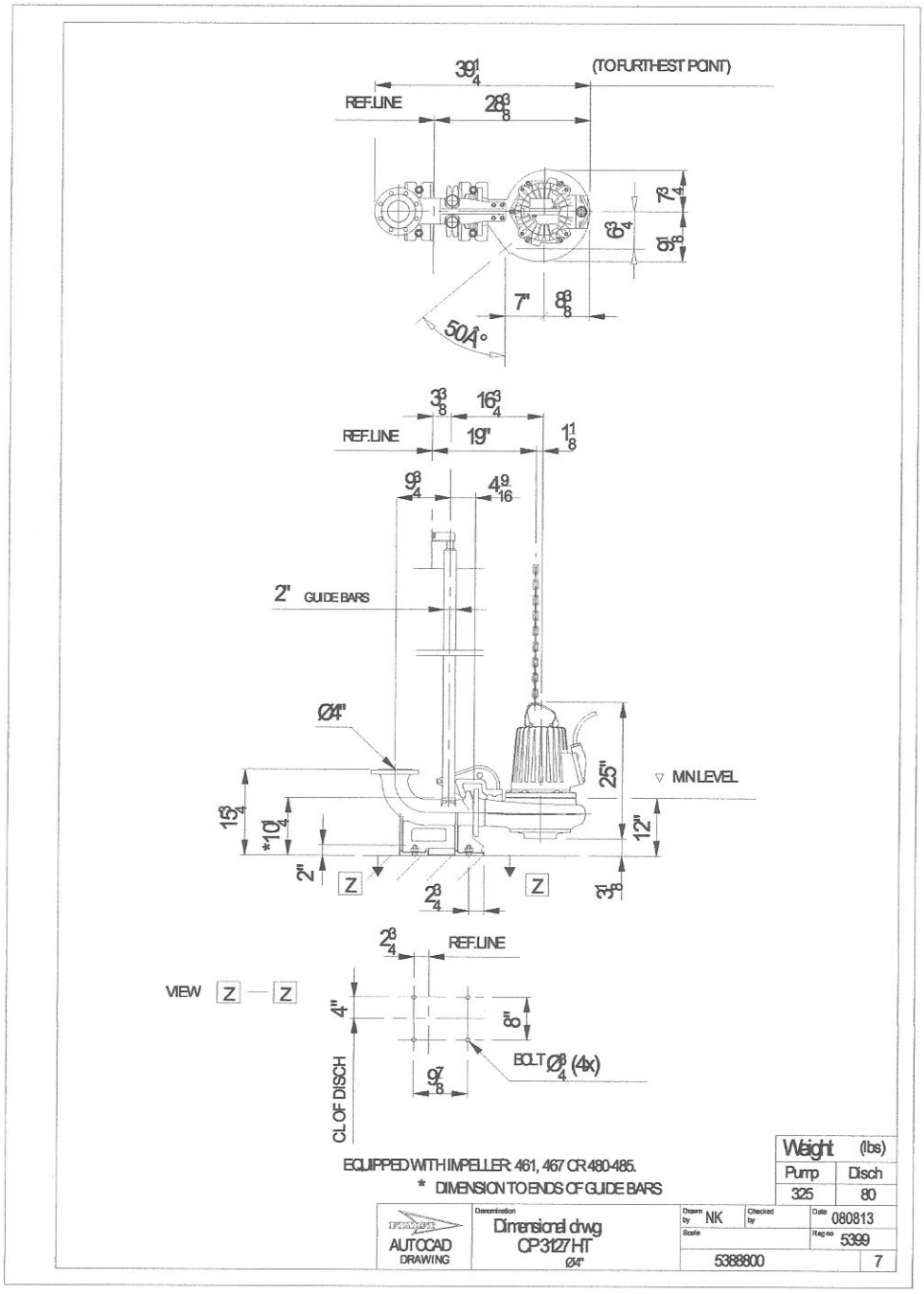

Project	Project ID	Created by	Created on	Last update
			2017-04-26	

UNIVERSITY PARK LIFT STATION

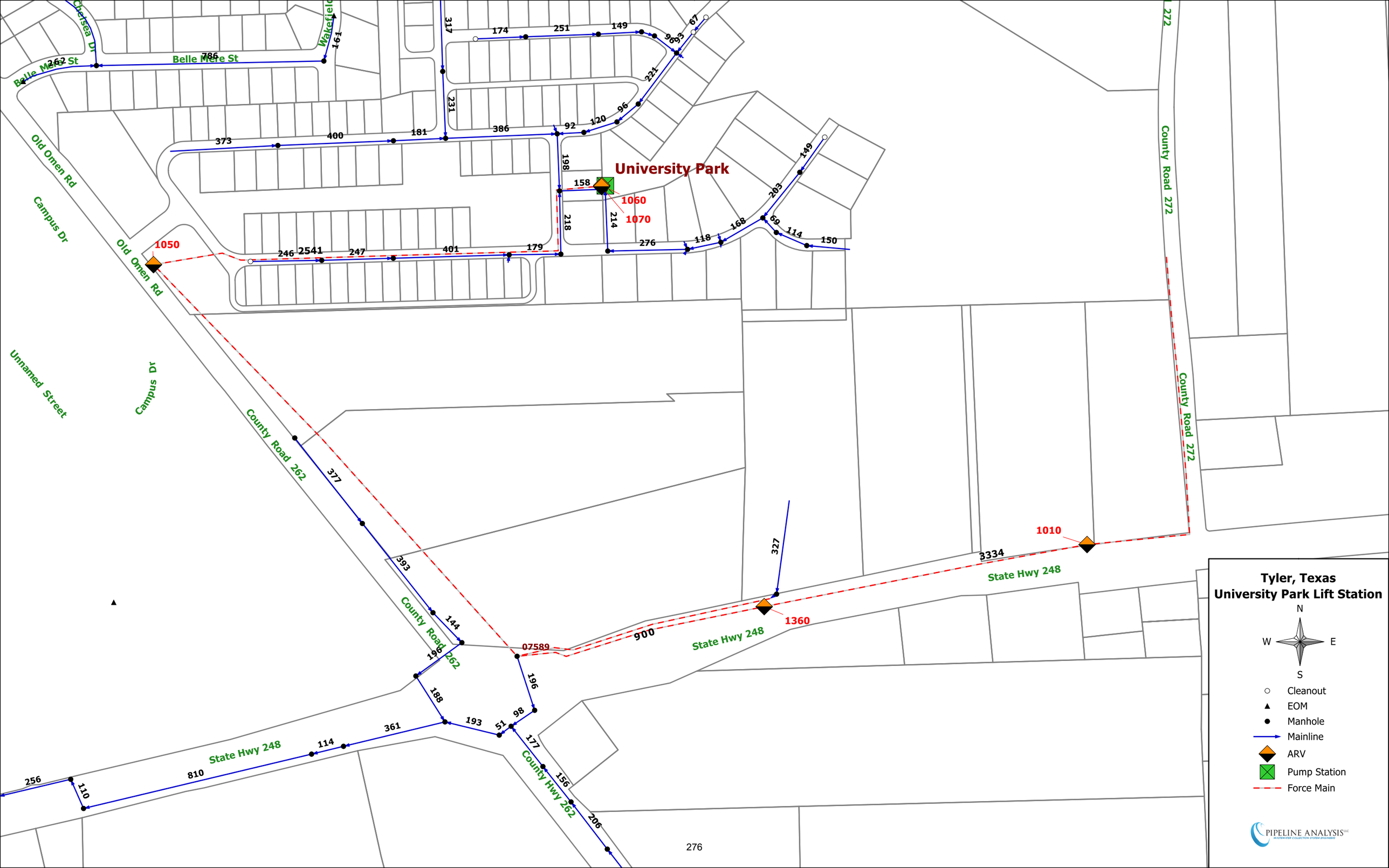

Tyler, Texas
University Park Lift Station
N
W
E
S
Cleanout
EOM
Manhole
Mainline
ARV
Pump Station
Force Main
PIPELINE ANALYSIS
University Park
1060
1070
1050
1010
1360
07589
Belle Mere St
Chelsea Dr
Wakefield
Old Omen Rd
Campus Dr
Unnamed Street
County Road 262
County Road 272
State Hwy 248
County Hwy 262

Tyler Water Utilities - Lift Station Assessment Form

Lift Station Name UNIVERSITY PARK **Type** Submersible
Location/Address 3996 Duchess Dr.
Lift Station Asset ID **Number of Pumps** 2
Firm Capacity in GPM (all pumps operating)
Firm Capacity in GPM (largest pump out of service)
Inspector Don White **Date** Dec 14, 2017
City Works Work Order

Building and Grounds

			Good	Fair	Poor	Critical	N/A
Building Structure	Type: NONE						
	Building Roof/Ceiling		○	○	○	○	○
	Building Finishes		○	○	○	○	○
	Building Doors and Windows		○	○	○	○	○
	Building HVAC	Type:	○	○	○	○	○
Fencing w/ metal post	Type: Wood		○	●	○	○	○
9'-6" Gates metal post & Frame	Type: Wood		○	●	○	○	○
Site/Grounds	Size: 24'-6" x 24'-6"		○	●	○	○	○
	Lighting Not operational		○	○	○	●	○
Pavement (Driving) dirt in site	Type: conc. drive to gate.		○	○	●	○	○
Drainage	Type: Surface		○	○	●	○	○
Odor	Comment: Minor		○	●	○	○	○
	Odor Control System	Type: None	○	○	○	○	○
	Odor Control Mechanical		○	○	○	○	○
	Odor Control Media	Type:	○	○	○	○	○
Noise			○	○	○	○	○
Overall Site Appearance			○	○	●	○	○

Comments bulbs out on both lights; wet well top in ground low - openings in wet well top allow drainage into wet well - also from drive. Railroad tie retaining wall deteriorated

Structural

			Good	Fair	Poor	Critical	N/A
Wet Well	Size:	?					
Debris			○	○	●	○	○
Fats, oils, and grease			○	●	○	○	○
Ventilation		Holes in plywood	○	○	●	○	○
Walls	Material:	Concrete	○	○	●	○	○
Coatings	Type:		○	○	○	○	○
Access Hatches	Number:	1 Plywood	○	○	○	●	○
Slab		Metal & unpainted Plywood	○	○	●	○	○
Dry Well/Valve Vault		NONE					
Walls	Material:		○	○	○	○	○
Coatings	Type:		○	○	○	○	○
Grating/Hatching	Number:		○	○	○	○	○
Stairway/Ladder	Material:		○	○	○	○	○
Sump/Pump	Number:		○	○	○	○	○
Ventilation	Type:		○	○	○	○	○

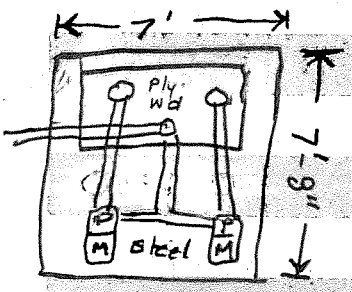

Comments wet well walls pitted w/ exposed aggregate, steel cover - corrosion, ply wood cover over ~ 2'-6" x 4'-6" opening in metal cover. 1" return line from each pump discharge piping to wet well for aeration

Mechanical

			Good	Fair	Poor	Critical	N/A
Bypass Connection	(Circle) YES / (NO)						
Piping and Valves							
Suction Valve	Number:		○	○	○	○	○
4" Check Valve DI	Number:	2	○	○	●	○	○
4" Discharge Valve DI	Number:	1	○	○	●	○	○

Mechanical (continued)

			Good	Fair	Poor	Critical	N/A
Riser Piping	Material:	DI - 4"	○	○	●	○	○

Discharge Piping	Material: DI-4"	○	○	●	○	○
Fittings	Material: DI-4"	○	○	●	○	○

Comments Significant Corrosion on all components. Check valve does not work on 1 pump, combined discharge pipe leaks into wetwell during and after pumping

Pumps

Pump 1 Asset ID _____ Make _____ Model _____

Capacity _____ GPM

Impeller Dia./Code _____ Horsepower _____

	Good	Fair	Poor	Critical	N/A
Pump	○	○	○	○	○
Seals	○	○	○	○	○
Motor	○	○	○	○	○
Shaft	○	○	○	○	○
Electrical Cable					
Noise	○	○	○	○	○
Vibration/Heat	○	○	○	○	○

Pump 1 *The following components are to be inspected during pump disassembly*

Oil	○	○	○	○	○
Impeller	○	○	○	○	○
Packing Rings	○	○	○	○	○
Internal Seals	○	○	○	○	○

Significant corrosion on pumps and frames, motors have grease accumulation on shaft

Pump 2 Asset ID _____ Make _____ Model _____

Capacity _____ GPM

Impeller Dia./Code _____ Horsepower _____

	Good	Fair	Poor	Critical	N/A
Pump	○	○	○	○	○
Seals	○	○	○	○	○
Motor	○	○	○	○	○
Shaft	○	○	○	○	○
Electrical Cable					
Noise	○	○	○	○	○
Vibration/Heat	○	○	○	○	○

Pump 2 *The following components are to be inspected during pump disassembly*

Oil	○	○	○	○	○
Impeller	○	○	○	○	○
Packing Rings	○	○	○	○	○
Internal Seals	○	○	○	○	○

Pump 3 Asset ID _____ Make _____ Model _____

Capacity _____ GPM

Impeller Dia./Code _____ Horsepower _____

	Good	Fair	Poor	Critical	N/A
Pump	○	○	○	○	○
Seals	○	○	○	○	○
Motor	○	○	○	○	○
Shaft	○	○	○	○	○
Electrical Cable					
Noise	○	○	○	○	○
Vibration/Heat	○	○	○	○	○

Pump 3 *The following components are to be inspected during pump disassembly*

	Good	Fair	Poor	Critical	N/A
Oil	○	○	○	○	○
Impeller	○	○	○	○	○
Packing Rings	○	○	○	○	○
Internal Seals	○	○	○	○	○

Pump 4 Asset ID _____ Make _____ Model _____

Capacity _____ GPM

Impeller Dia./Code _____ Horsepower _____

	Good	Fair	Poor	Critical	N/A
Pump	○	○	○	○	○
Seals	○	○	○	○	○
Motor	○	○	○	○	○
Shaft	○	○	○	○	○
Electrical Cable					
Noise	○	○	○	○	○
Vibration/Heat	○	○	○	○	○

Pump 4 *The following components are to be inspected during pump disassembly*

Oil	○	○	○	○	○
Impeller	○	○	○	○	○
Packing Rings	○	○	○	○	○
Internal Seals	○	○	○	○	○

Pump 5 Asset ID _____ Make _____ Model _____

Capacity _____ GPM

Impeller Dia./Code _____ Horsepower _____

	Good	Fair	Poor	Critical	N/A
Pump	○	○	○	○	○
Seals	○	○	○	○	○
Motor	○	○	○	○	○
Shaft	○	○	○	○	○
Electrical Cable					
Noise	○	○	○	○	○
Vibration/Heat	○	○	○	○	○

Pump 5 *The following components are to be inspected during pump disassembly*

Oil	○	○	○	○	○
Impeller	○	○	○	○	○
Packing Rings	○	○	○	○	○
Internal Seals	○	○	○	○	○

Pump 6 Asset ID _____ Make _____ Model _____

Capacity _____ GPM

Impeller Dia./Code _____ Horsepower _____

	Good	Fair	Poor	Critical	N/A
Pump	○	○	○	○	○
Seals	○	○	○	○	○
Motor	○	○	○	○	○
Shaft	○	○	○	○	○
Electrical Cable	○	○	○	○	○
Noise	○	○	○	○	○
Vibration/Heat	○	○	○	○	○

Pump 6 *The following components are to be inspected during pump disassembly*

	Good	Fair	Poor	Critical	N/A
Oil	○	○	○	○	○
Impeller	○	○	○	○	○
Packing Rings	○	○	○	○	○
Internal Seals	○	○	○	○	○

Electrical System

				Good	Fair	Poor	Critical	N/A
Electrical System Power	Volt/Phase:							
Panel/Enclosures	NEMA4X	YES	NO	○	●	○	○	○
Transformers (AEP)				○	○	○	○	○
Disconnect	Type:			○	○	○	○	○
Generator	KW	NO		○	○	○	○	○
Transfer Switch				○	○	○	○	○
Electrical System Control								
Breakers	Type:			○	○	○	○	○
Speed control/VFD	Type:			○	○	○	○	○
Starters	Type:			○	○	○	○	○
Control Relays	Type:			○	○	○	○	○

Comments PVC wire conduit not connected @ Fitting, open exposed Junction box at base of service pole

Instrumentation/SCADA

			Good	Fair	Poor	Critical	N/A
Panel	NEMA4X YES (NO)		○	○	●	○	○
Instrumentation							
Level	Type:	Ultra sonic	○	●	○	○	○
Flow	Type:	No	○	○	○	○	○

Instrumentation/SCADA (continued)			Good	Fair	Poor	Critical	N/A
PLC	Type:		○	○	○	○	○
SCADA			○	○	○	○	○
RTU	Type:	Uplink	●	○	○	○	○
Radio/Antenna	Type:	Pole on Panel top	○	○	○	○	○

Comments Panel has corrosion
No Alarms visible

Building and Grounds

Lift Station Perimeter Facing North

Lift Station Perimeter Facing South.
Light Bulbs Broken in Both Lights On Site

Wet Well Top Covered With Wooden Board.
Openings Allow I/I Into Wet Well

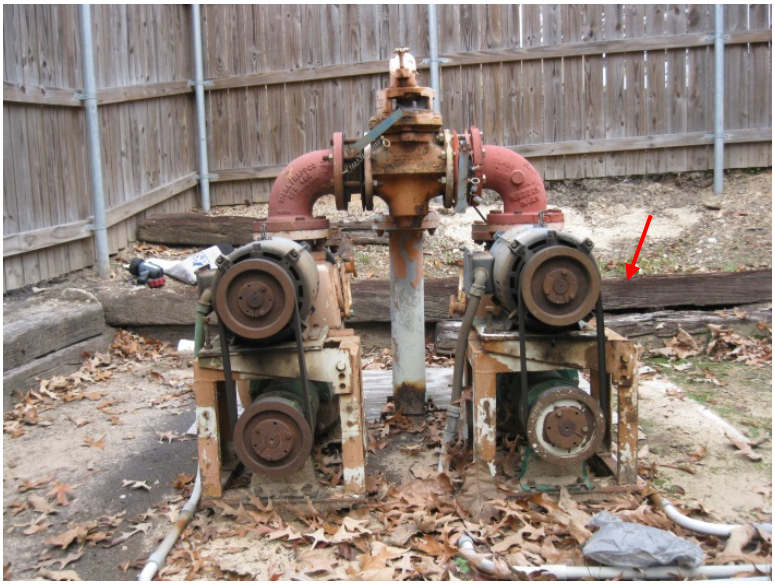

Ground From North Side Sloped Towards Wet Well Slab.
Railroad Tie Retaining Wall Visible Behind Pumps

Building and Grounds

Railroad Tie Retaining Wall Deteriorated (1)

Railroad Tie Retaining Wall Deteriorated (2)

Structural

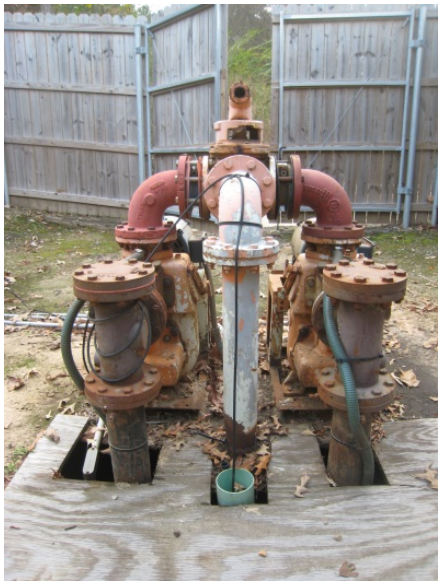

Wet Well Opening Covered With Wood Board. No Wet Well Hatch In Place

Pump Frames Corroded

Mechanical

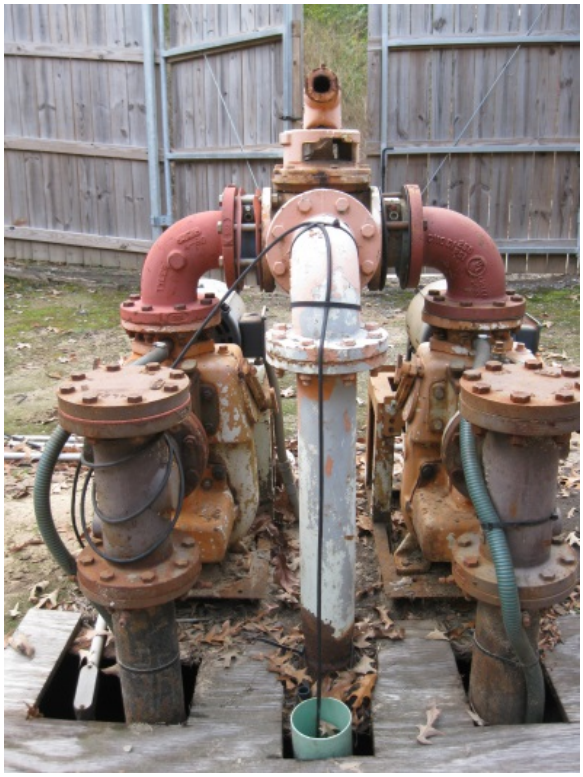

All Components With Significant Corrosion;
Check Valve on Pump 1 Not Working

Electrical

Open Exposed Junction Box at Base of Service Pole

PVC Wire Conduit Not Connected at Fitting

Instrumentation/SCADA

Instrumentation Panel With Corrosion

Uplink RTU Inside Instrumentation Panel Door

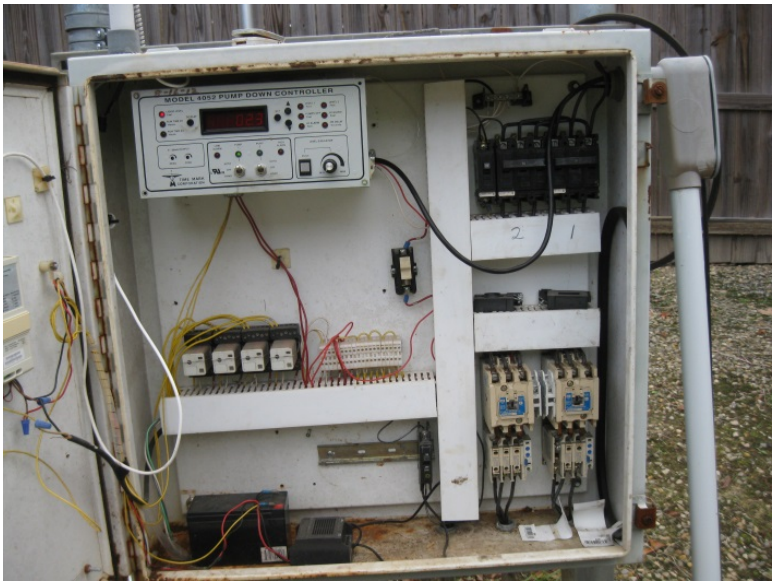

Inside Instrumentation Panel

Performance Curve – 40MPH

RPM: **Variable** DISCHARGE: **4"** SOLIDS: **3"** IMPELLER: **9-5/32"**

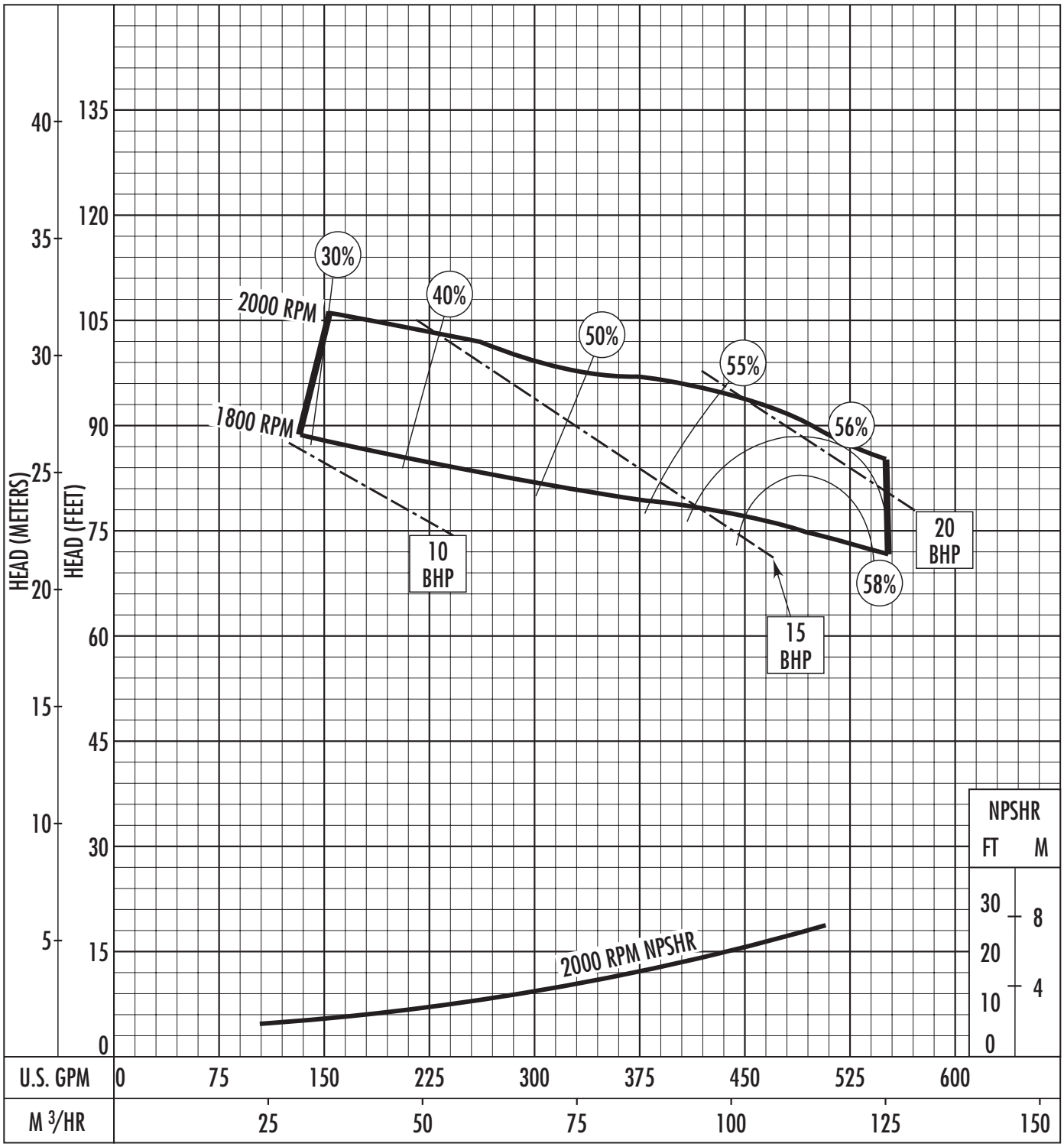

Operation is recommended in the bounded area with operational point within the curve limit.
Performance curves are based on actual tests with clear water at 70° F. and 1280 feet site elevation.

Conditions of Service:

GPM: _____ TDH: _____

October © 2014 Pentair Ltd.

BROOKS LIFT STATION

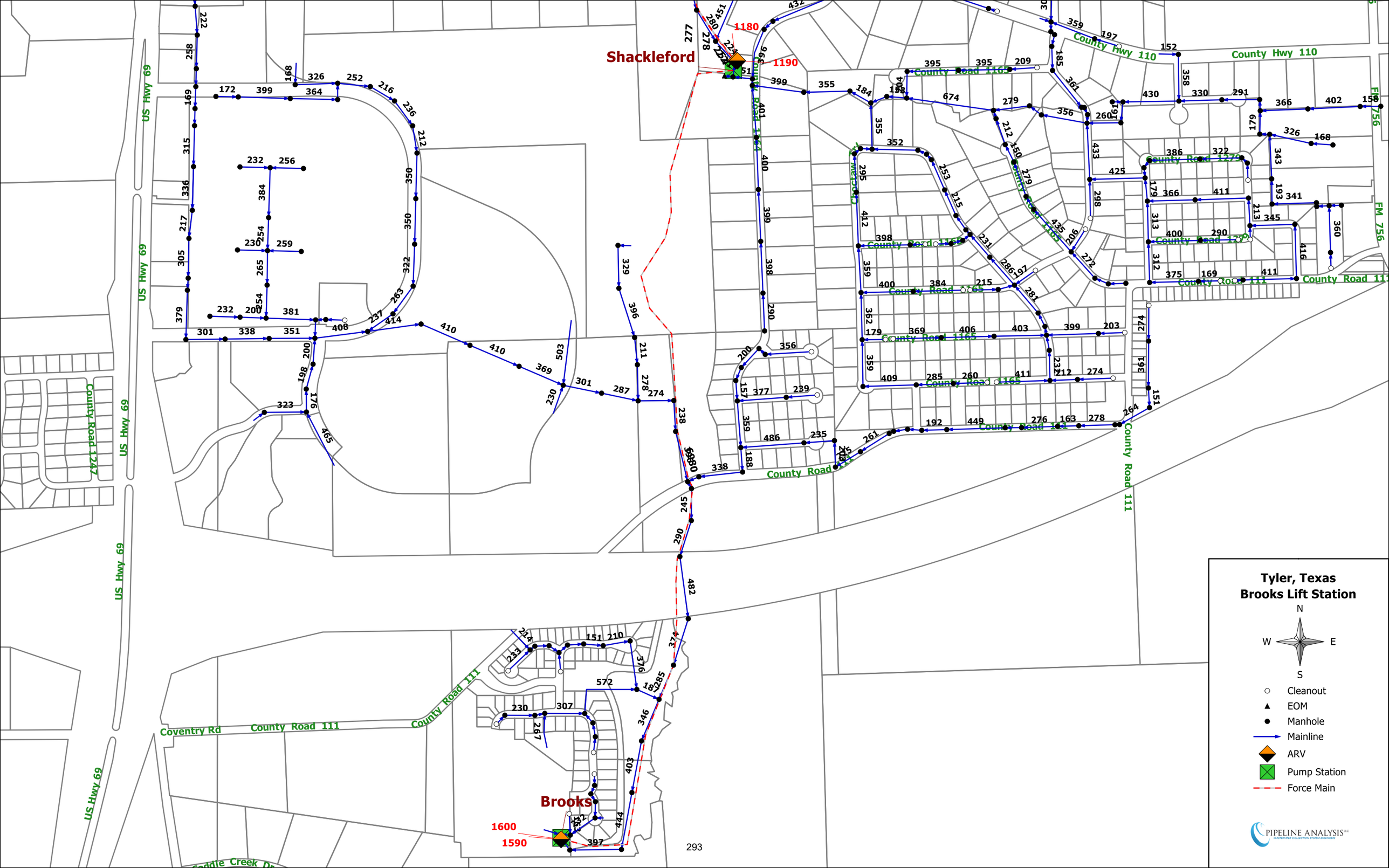
Shackleford
Brooks
1180
1190
1600
1590
US Hwy 69
County Road 1247
County Road 111
County Road 1165
County Road 1279
County Hwy 110
FM 756
Coventry Rd
Saddle Creek Dr
Choctaw Ln
Tyler, Texas
Brooks Lift Station
N
W
E
S
Cleanout
EOM
Manhole
Mainline
ARV
Pump Station
Force Main
PIPELINE ANALYSIS LLC

Tyler Water Utilities - Lift Station Assessment Form

Lift Station Name BROOKS **Type** Submersible
Location/Address 92414 Quiet Water
Lift Station Asset ID **Number of Pumps** 2
Firm Capacity in GPM (all pumps operating)
Firm Capacity in GPM (largest pump out of service)
Inspector Don White **Date** Dec 12, 2017
City Works Work Order

Building and Grounds

			Good	Fair	Poor	Critical	N/A
Building Structure	Type:	NONE					
Building Roof/Ceiling			○	○	○	○	○
Building Finishes			○	○	○	○	○
Building Doors and Windows			○	○	○	○	○
Building HVAC	Type:		○	○	○	○	○
Fencing w/ metal Poles	Type:	Wood	○	●	○	○	○
Gates Double 10 Foot	Type:	Wood	○	○	●	○	○
Site/Grounds	Size:	58' x 73'	○	●	○	○	○
Lighting		✓	●	○	○	○	○
Pavement (Driving)	Type:	NONE	○	○	○	○	○
Drainage	Type:	SURFACE	○	●	○	○	○
Odor	Comment:	NONE	●	○	○	○	○
Odor Control System	Type:	—	○	○	○	○	○
Odor Control Mechanical			○	○	○	○	○
Odor Control Media	Type:		○	○	○	○	○
Noise			○	○	○	○	○
Overall Site Appearance			●	○	○	○	○

Comments Valve & Wet Well slab Flush w/ natural ground. Erosion over valve pit slab and wet well slab. Some wood fence slats are broken or deflected.

Structural

			Good	Fair	Poor	Critical	N/A
Wet Well		Size: 30'-6" x 20'-6"					
	Debris		○	○	●	○	○
	Fats, oils, and grease		○	●	○	○	○
	Ventilation	PIPE - CORROSION	○	●	○	○	○
	Walls	Material: Concrete	●	○	○	○	○
	Coatings	Type: ✓ thin	○	●	○	○	○
CORROSION ON FRAMES	Access Hatches	Number: 4 - double 4x4	○	●	○	○	○
	Slab	concrete 32'-6" x 22'-6"	●	○	○	○	○
Dry Well/Valve Vault							
Slab 8'x14'-6"	Walls ~6'x12'-6"	Material: CONCRETE	●	○	○	○	○
	Coatings	Type: ?	○	○	○	○	○
	~~Grating~~/Hatching	Number: 2 - double 4x4	●	○	○	○	○
	~~Stairway/Ladder~~	Material: ———	○	○	○	○	○
	~~Sump~~/Pump	Number: GRATE INLET	●	○	○	○	○
CORROSION	Ventilation	Type: Vent Pipe	○	●	○	○	○

Comments Valve pit has spare space for two more lines
wet well - Air Compressor air line to w.w. for AIRATION
Mystry electric s.s box w elect. contacts on top of
W.W. slab get flooded w/ rain.

Mechanical

			Good	Fair	Poor	Critical	N/A
Bypass Connection	(Circle)	YES / NO					
Piping and Valves							
	Suction Valve	Number:	○	○	○	○	○
DI 8"	Check Valve	Number: 2	○	○	●	○	○
DI 8"	Discharge Valve	Number: 2	○	○	●	○	○

Mechanical (continued)

			Good	Fair	Poor	Critical	N/A
	Riser Piping 8"	Material: DI - CORROSION	○	○	●	○	○

12"	Discharge Piping	Material: DI	●	○	○	○	○
	Fittings	Material: DI	○	○	●	○	○

Comments CORROSION ON VALVES AND FITTINGS

Pumps

Pump 1 Asset ID _____ Make _____ Model _____

Capacity _____ GPM

Impeller Dia./Code _____ Horsepower _____

	Good	Fair	Poor	Critical	N/A
Pump	○	○	○	○	○
Seals	○	○	○	○	○
Motor	○	○	○	○	○
Shaft	○	○	○	○	○
Electrical Cable					
Noise	○	○	○	○	○
Vibration/Heat	○	○	○	○	○

Pump 1 *The following components are to be inspected during pump disassembly*

	Good	Fair	Poor	Critical	N/A
Oil	○	○	○	○	○
Impeller	○	○	○	○	○
Packing Rings	○	○	○	○	○
Internal Seals	○	○	○	○	○

chains have corrosion. Guide Rails and electric conduits - Good

Pump 2 Asset ID _____ Make _____ Model _____

Capacity _____ GPM

Impeller Dia./Code _____ Horsepower _____

	Good	Fair	Poor	Critical	N/A
Pump	○	○	○	○	○
Seals	○	○	○	○	○
Motor	○	○	○	○	○
Shaft	○	○	○	○	○
Electrical Cable					
Noise	○	○	○	○	○
Vibration/Heat	○	○	○	○	○

Pump 2 *The following components are to be inspected during pump disassembly*

Oil	○	○	○	○	○
Impeller	○	○	○	○	○
Packing Rings	○	○	○	○	○
Internal Seals	○	○	○	○	○

Chain Stainless new, guide rail OK

Pump 3 Asset ID _____ Make _____ Model _____

Capacity _____ GPM

Impeller Dia./Code _____ Horsepower _____

	Good	Fair	Poor	Critical	N/A
Pump	○	○	○	○	○
Seals	○	○	○	○	○
Motor	○	○	○	○	○
Shaft	○	○	○	○	○
Electrical Cable					
Noise	○	○	○	○	○
Vibration/Heat	○	○	○	○	○

Pump 3 *The following components are to be inspected during pump disassembly*

	Good	Fair	Poor	Critical	N/A
Oil	○	○	○	○	○
Impeller	○	○	○	○	○
Packing Rings	○	○	○	○	○
Internal Seals	○	○	○	○	○

Pump 4 Asset ID _____ Make _____ Model _____

Capacity _____ GPM

Impeller Dia./Code _____ Horsepower _____

	Good	Fair	Poor	Critical	N/A
Pump	○	○	○	○	○
Seals	○	○	○	○	○
Motor	○	○	○	○	○
Shaft	○	○	○	○	○
Electrical Cable					
Noise	○	○	○	○	○
Vibration/Heat	○	○	○	○	○

Pump 4 *The following components are to be inspected during pump disassembly*

Oil	○	○	○	○	○
Impeller	○	○	○	○	○
Packing Rings	○	○	○	○	○
Internal Seals	○	○	○	○	○

Pump 5 Asset ID _____ Make _____ Model _____

Capacity _____ GPM

Impeller Dia./Code _____ Horsepower _____

	Good	Fair	Poor	Critical	N/A
Pump	○	○	○	○	○
Seals	○	○	○	○	○
Motor	○	○	○	○	○
Shaft	○	○	○	○	○
Electrical Cable					
Noise	○	○	○	○	○
Vibration/Heat	○	○	○	○	○

Pump 5 *The following components are to be inspected during pump disassembly*

Oil	○	○	○	○	○
Impeller	○	○	○	○	○
Packing Rings	○	○	○	○	○
Internal Seals	○	○	○	○	○

Pump 6 Asset ID _____ Make _____ Model _____

Capacity _____ GPM

Impeller Dia./Code _____ Horsepower _____

	Good	Fair	Poor	Critical	N/A
Pump	○	○	○	○	○
Seals	○	○	○	○	○
Motor	○	○	○	○	○
Shaft	○	○	○	○	○
Electrical Cable	○	○	○	○	○
Noise	○	○	○	○	○
Vibration/Heat	○	○	○	○	○

Pump 6 *The following components are to be inspected during pump disassembly*

	Good	Fair	Poor	Critical	N/A
Oil	○	○	○	○	○
Impeller	○	○	○	○	○
Packing Rings	○	○	○	○	○
Internal Seals	○	○	○	○	○

Electrical System

			Good	Fair	Poor	Critical	N/A
Electrical System Power	Volt/Phase:						
Panel/Enclosures	NEMA4X	YES NO	●	○	○	○	○
Transformers (AEP)			○	○	○	○	○
Disconnect	Type:		○	○	○	○	○
Generator	KW	No	○	○	○	○	○
Transfer Switch	Yes but No Gen.		○	○	○	○	○
Electrical System Control							
Breakers	Type:		○	○	○	○	○
Speed control/VFD	Type:		○	○	○	○	○
Starters	Type:		○	○	○	○	○
Control Relays	Type:		○	○	○	○	○

Comments Alarm light disconnected
open EMT on top of Electric Panel Raceway feeds
rainwater into raceway.

Instrumentation/SCADA

			Good	Fair	Poor	Critical	N/A
Panel	NEMA4X YES NO		○	○	○	○	○
Instrumentation							
Level	Type:	Ultrasonic	●	○	○	○	○
Flow	Type:	—	○	○	○	○	○

Instrumentation/SCADA (continued)

			Good	Fair	Poor	Critical	N/A
PLC	Type:		○	○	○	○	○
SCADA			○	○	○	○	○
RTU	Type:	Uplink	●	○	○	○	○
Radio/Antenna	Type:	in control panel	●	○	○	○	○

Comments _____

Building and Grounds

Lift Station Perimeter Facing West

Valve Vault and Wet Well Slab Flush With Natural Ground

Valve Vault Slab Flush With Natural Ground
with Signs of Erosion Around the Slab

Building and Grounds

Lift Station Perimeter Facing East

Erosion Around Fencing Facing South

Structural

Wet Well Rim Not Coated and Showing Some Corrosion

Wet Well Concrete Walls in Good Condition

Mechanical

Minor Corrosion on Valves in Valve Vault

Valve Vault Interior

Minor Corrosion on Ventilation Pipe

Corrosion on Chains and Rails

Electrical

Electrical and Instrumentation Panel Facing South

Electric Panel Interior

Abandoned Electrical Junction Box on Wet Well Slab

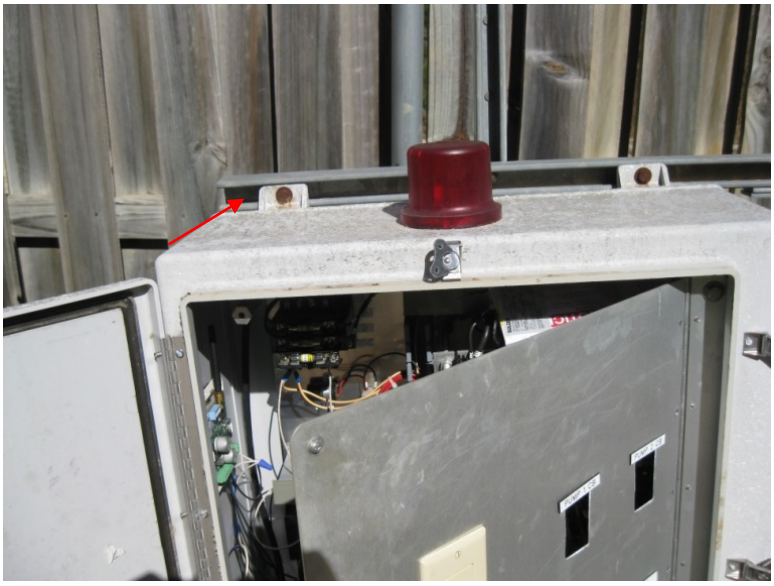

Open EMT on Top of Electric Panel Allows Rainwater to Enter. Alarm Light On Top of Panel Disconnected

Instrumentation/SCADA

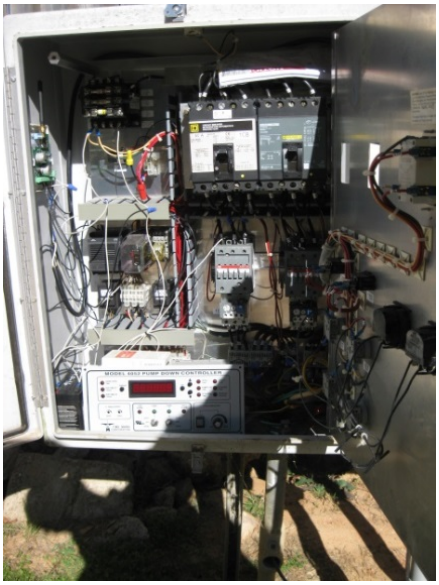

Inside Instrumentation Panel

Instrumentation Panel Door

Antenna in Instrumentation Panel

Uplink RTU

Curve number	Pump performance curves	
Reference curve XFP100E CB1 60HZ	**XFP100E CB1 60HZ (wet pit)**	SULZER

			Discharge	Frequency
			DN100	60 Hz
Density	Viscosity	Testnorm	Rated speed	Date
62,32 lb/ft³	1,082E-5 ft²/s	ISO 9906: 2012, HI 11.6/14.6 ≤10kW	1745 rpm	2017-04-26
Flow	Head	Rated power	Hydraulic efficiency	NPSH

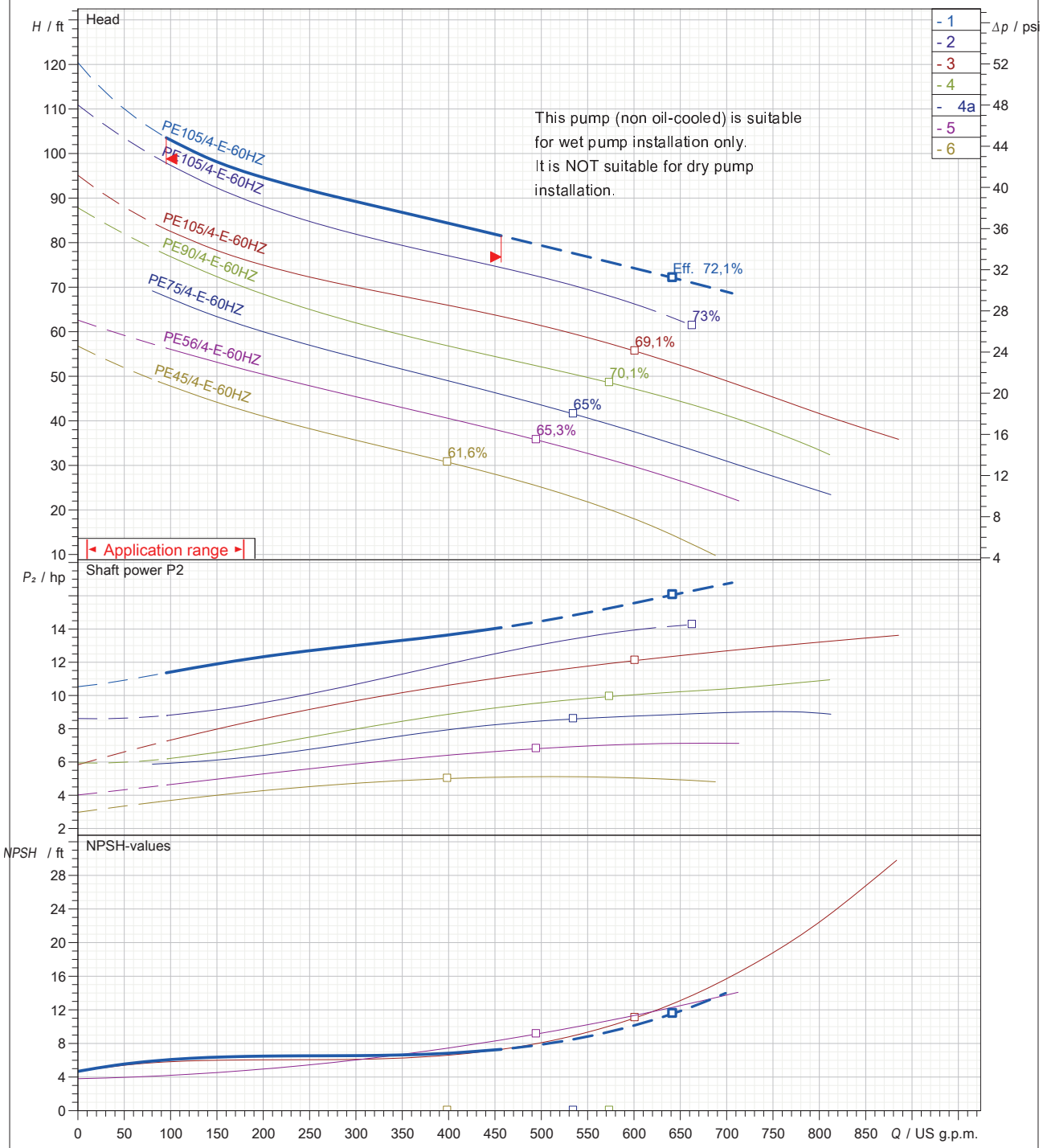

Impeller size	N° of vanes	Impeller	Solid size	Revision
9,84 inch	1	Contrablock Plus impeller, 1 vane	3,15 inch	

Sulzer reserves the right to change any data and dimensions without prior notice
and can not be held responsible for the use of information contained in this software.